TELEDYNE API
Everywhereyoulook™

Operation Manual

Model T400
Photometric Ozone Analyzer

© TELEDYNE API (TAPI)
9970 CARROLL CANYON ROAD
SAN DIEGO, CA 92131-1106
USA

Toll-free Phone: 800-324-5190
Phone: +1 858-657-9800
Fax: +1 858-657-9816
Email: api-sales@teledyne.com
Website: http://www.teledyne-api.com/

Copyright 2010-2018
Teledyne API

06870H DCN8016
30 October 2018

NOTICE OF COPYRIGHT

© 2010-2018 Teledyne API. All rights reserved.

TRADEMARKS

All trademarks, registered trademarks, brand names or product names appearing in this document are the property of their respective owners and are used herein for identification purposes only.

IMPORTANT SAFETY INFORMATION

Important safety messages are provided throughout this manual for the purpose of avoiding personal injury or instrument damage. Please read these messages carefully. Each safety message is associated with a safety alert symbol, and are placed throughout this manual and inside the instrument. The symbols with messages are defined as follows:

WARNING: Electrical Shock Hazard

HAZARD: Strong oxidizer

GENERAL WARNING/CAUTION: Read the accompanying message for specific information.

CAUTION: Hot Surface Warning

Do Not Touch: Touching some parts of the instrument without protection or proper tools could result in damage to the part(s) and/or the instrument.

Technician Symbol: All operations marked with this symbol are to be performed by qualified maintenance personnel only.

Electrical Ground: This symbol inside the instrument marks the central safety grounding point for the instrument.

CAUTION

This instrument should only be used for the purpose and in the manner described in this manual. If you use this instrument in a manner other than that for which it was intended, unpredictable behavior could ensue with possible hazardous consequences.

NEVER use any gas analyzer to sample combustible gas(es).

Note

Technical Assistance regarding the use and maintenance of the T400 or any other Teledyne API product can be obtained by contacting Teledyne API's Technical Support Department:

Phone: 800-324-5190

Email: api-techsupport@teledyne.com

or by accessing various service options on our website at http://www.teledyne-api.com.

CONSIGNES DE SÉCURITÉ

Des consignes de sécurité importantes sont fournies tout au long du présent manuel dans le but d'éviter des blessures corporelles ou d'endommager les instruments. Veuillez lire attentivement ces consignes. Chaque consigne de sécurité est représentée par un pictogramme d'alerte de sécurité; ces pictogrammes se retrouvent dans ce manuel et à l'intérieur des instruments. Les symboles correspondent aux consignes suivantes :

AVERTISSEMENT : Risque de choc électrique

DANGER : Oxydant puissant

AVERTISSEMENT GÉNÉRAL / MISE EN GARDE : Lire la consigne complémentaire pour des renseignements spécifiques

MISE EN GARDE : Surface chaude

Ne pas toucher : Toucher à certaines parties de l'instrument sans protection ou sans les outils appropriés pourrait entraîner des dommages aux pièces ou à l'instrument.

Pictogramme « technicien » : Toutes les opérations portant ce symbole doivent être effectuées uniquement par du personnel de maintenance qualifié.

Mise à la terre : Ce symbole à l'intérieur de l'instrument détermine le point central de la mise à la terre sécuritaire de l'instrument.

MISE EN GARDE

Cet instrument doit être utilisé aux fins décrites et de la manière décrite dans ce manuel. Si vous utilisez cet instrument d'une autre manière que celle pour laquelle il a été prévu, l'instrument pourrait se comporter de façon imprévisible et entraîner des conséquences dangereuses.

NE JAMAIS utiliser un analyseur de gaz pour échantillonner des gaz combustibles!

WARRANTY

WARRANTY POLICY (02024J)

Teledyne Advanced Pollution Instrumentation (TAPI), a business unit of Teledyne Instruments, Inc., provides that:

Prior to shipment, TAPI equipment is thoroughly inspected and tested. Should equipment failure occur, TAPI assures its customers that prompt service and support will be available. (For the instrument-specific warranty period, please refer to the "Limited Warranty" section in the Terms and Conditions of Sale on our website at the following link: http://www.teledyne-api.com/terms_and_conditions.asp).

COVERAGE

After the warranty period and throughout the equipment lifetime, TAPI stands ready to provide on-site or in-plant service at reasonable rates similar to those of other manufacturers in the industry. All maintenance and the first level of field troubleshooting are to be performed by the customer.

NON-TAPI MANUFACTURED EQUIPMENT

Equipment provided but not manufactured by TAPI is warranted and will be repaired to the extent and according to the current terms and conditions of the respective equipment manufacturer's warranty.

PRODUCT RETURN

All units or components returned to Teledyne API should be properly packed for handling and returned freight prepaid to the nearest designated Service Center. After the repair, the equipment will be returned, freight prepaid.

The complete Terms and Conditions of Sale can be reviewed at http://www.teledyne-api.com/terms_and_conditions.asp

CAUTION – Avoid Warranty Invalidation

Failure to comply with proper anti-Electro-Static Discharge (ESD) handling and packing instructions and Return Merchandise Authorization (RMA) procedures when returning parts for repair or calibration may void your warranty. For anti-ESD handling and packing instructions please refer to the manual, Fundamentals of ESD, PN 04786, in its "Packing Components for Return to Teledyne API's Customer Service" section. The manual can be downloaded from our website at http://www.teledyne-api.com. RMA procedures can also be found on our website.

ABOUT THIS MANUAL

Presented here is information regarding the documents that are included with this manual and a description of the conventions used.

STRUCTURE

This T400 manual, PN 06870 is comprised of multiple documents, assembled in PDF format, as listed below.

Part No.	Rev	Name/Description
06870	H	Operation Manual, T400 Photometric Ozone Analyzer
04402	H	Appendix A, Menu Trees and related software documentation
06913	A	Interconnect Diagram, T400 (in Appendix B of this manual)

Note

We recommend that this manual be read in its entirety before any attempt is made to operate the instrument.

CONVENTIONS USED

In addition to the safety symbols as presented in the *Important Safety Information* page, this manual provides *special notices* related to the safety and effective use of the analyzer and other pertinent information. **Special Notices** appear as follows:

ATTENTION

COULD DAMAGE INSTRUMENT AND VOID WARRANTY

This special notice provides information to avoid damage to your instrument and possibly invalidate the warranty.

IMPORTANT

IMPACT ON READINGS OR DATA

Could either affect accuracy of instrument readings or cause loss of data.

Note

Pertinent information associated with the proper care, operation or maintenance of the analyzer or its parts.

TABLE OF CONTENTS

1. INTRODUCTION, FEATURES AND OPTIONS 14
1.1. Overview 14
1.2. Features 14
1.3. Options 15
2. SPECIFICATIONS, APPROVALS & COMPLIANCE 18
2.1. Specifications 18
2.2. EPA Equivalency Designation 20
2.3. Approvals and Certifications 20
2.3.1. Safety 20
2.3.2. EMC 20
2.3.3. Other Type Certifications 20
3. GETTING STARTED 21
3.1. Unpacking the T400 Analyzer 21
3.1.1. Ventilation Clearance 22
3.2. Instrument layout 23
3.2.1. Front Panel 23
3.2.2. Rear Panel 27
3.2.3. Internal Chassis Layout 29
3.3. Connections and Setup 30
3.3.1. Electrical Connections 30
3.3.1.1. Connecting Power 30
3.3.1.2. Connecting Analog Inputs (Option) 31
3.3.1.3. Connecting Analog Outputs 31
3.3.1.4. Current Loop Analog Outputs (Option 41) Setup 32
3.3.1.5. Connecting the Status Outputs 34
3.3.1.6. Connecting the Control Inputs 35
3.3.1.7. Connecting the Concentration Alarm Relay (Option 61) 36
3.3.1.8. Connecting the Communications Interfaces 38
3.3.2. Pnenumatic Connections 44
3.3.2.1. About Zero Air and Calibration Gas 44
3.3.2.2. Pneumatic Setup for Basic Configuration 47
3.3.2.3. Pneumatic Setup for the T400 Analyzer with Internal Zero/Span Option (IZS) 48
3.3.3. Pneumatic Setups for Ambient Air Monitoring 49
3.3.3.1. Pneumatic Set Up for T400's Located in the Same Room Being Monitored 49
3.3.3.2. Pneumatic Set Up for T400's Monitoring Remote Locations 50
3.4. Startup, Functional Checks, and Initial Calibration 51
3.4.1. Start Up 51
3.4.2. Warning Messages 51
3.4.3. Functional Check 53
3.4.4. Initial Calibration 53
3.4.4.1. Interferents for O_3 Measurement 53
3.4.5. Initial Calibration Procedure for T400 Analyzers without Options 54
3.4.5.1. Verifying the T400 Reporting Range Settings 54
3.4.5.2. Verifying the Expected O_3 Span Gas Concentration 55
3.4.6. Initial Calibration Procedure: 57
3.5. Configuring the Internal Zero/Span Option (IZS) 58
3.5.1. Verify the O_3 Generator and Expected O_3 Span Concentration Settings 58
3.5.2. Setting the O_3 Generator Low-Span (Mid Point) Output Level 59
3.5.3. Turning on the Reference Detector Option 60
3.5.4. Initial Calibration and Conditioning of T400 Analyzers with the IZS Option Installed 60
3.5.4.1. Initial O_3 Scrubber Conditioning 61
3.5.4.2. Verifying the T400 Reporting Range Settings 62
3.5.4.3. Initial Zero/Span Calibration Procedure 62
3.6. Calibration Valve Options 62

3.6.1. Ambient Zero/Ambient Span Valves (Opt 50A) 62
3.6.1.1. Pneumatic Setup for the T400 Analyzer with Zero/Span Valve Option 64
3.6.2. Internal Zero Span (IZS) Option (OPT 50G) 66
4. OVERVIEW OF OPERATING MODES 68
4.1. Sample Mode 70
4.1.1. Test Functions 70
4.1.2. Warning Messages 73
4.2. Calibration Mode 74
4.2.1. Calibration Mode with Valve Options 74
4.3. SETUP Mode 75
4.3.1. Password Security 75
4.3.2. Primary Setup Menu 75
5. SETUP MENU 77
5.1. SETUP → CFG: Configuration Information 77
5.2. SETUP → DAS: Internal Data acquisition System 78
5.3. SETUP → ACAL: Automatic Calibration Option 78
5.4. SETUP → RNGE: Analog Output Reporting Range Configuration 78
5.4.1.1. Physical Range versus Analog Output Reporting Ranges 78
5.4.1.2. Analog Output Ranges for O_3 Concentration 79
5.4.1.3. RNGE → MODE → SNGL: Single Range Mode Configuration 81
5.4.1.4. RNGE → MODE → DUAL: Dual Range Mode Configuration 82
5.4.1.5. RNGE → MODE → AUTO: Auto Range Mode Configuration 83
5.4.1.6. SETUP → RNGE → UNIT: Setting the Reporting Range Unit Type 84
5.5. SETUP → PASS: Password Protection 84
5.6. SETUP → CLK: Setting the T400 Analyzer's Internal Time-of-Day Clock and Adjusting Speed 87
5.6.1. Setting the Internal Clock's Time and Day 87
5.6.2. Adjusting the Internal Clock's Speed 88
5.7. SETUP → COMM: Communications Ports 89
5.7.1. ID (Machine Identification) 89
5.7.2. INET (Ethernet) 89
5.7.3. COM1 and COM2 (Mode, Baud Rate and Test Port) 89
5.8. SETUP → VARS: Variables Setup and Definition 90
5.9. SETUP → DIAG: Diagnostics Functions 92
5.10. Using the Model T400 Analyzer's Analog I/O 94
5.10.1. Adjusting & Calibrating the Analog Output Signals 95
5.10.1.1. Calibration of the Analog Outputs 95
5.10.1.2. Enabling or Disabling the AutoCal for an Individual Analog Output 95
5.10.1.3. Automatic Group Calibration of the Analog Outputs 97
5.10.1.4. Manual Calibration of the Analog Outputs Configured for Voltage Ranges 99
5.10.1.5. Manual Adjustment of Current Loop Output Span and Offset 101
5.10.1.6. Analog Output Voltage / Current Range Selection 104
5.10.1.7. Turning an Analog Output Over-Range Feature ON/OFF 105
5.10.1.8. Adding a Recorder Offset to an Analog Output 106
5.10.1.9. Selecting a Test Channel Function for Output A4 107
5.10.2. Analog Input (AIN) Calibration 109
5.10.3. Configuring Analog Inputs (Option) 110
6. COMMUNICATIONS SETUP AND OPERATION 111
6.1. Data Terminal/Communication Equipment (DTE DCE) 111
6.2. Communication Modes, Baud Rate and Port Testing 111
6.2.1. Communication Modes 112
6.2.2. COM Port Baud Rate 114
6.2.3. COM Port Testing 115
6.3. RS-232 116
6.4. RS-485 (Option) 116
6.5. Ethernet 116
6.5.1. Configuring Ethernet Communication Manually (Static IP Address) 117
6.5.2. Configuring Ethernet Communication with Dynamic Host Configuration Protocol (DHCP) 120
6.5.3. Changing the Analyzer's HOSTNAME 123

6.6. USB Port 124
6.7. Communications Protocols 124
6.7.1. MODBUS 124
6.7.2. Hessen 126
6.7.3. Hessen COMM Port Configuration 127
6.7.4. Activating Hessen Protocol 128
6.7.5. Selecting a Hessen Protocol Type 129
6.7.6. Setting The Hessen Protocol Response Mode 130
6.7.7. Hessen Protocol Gas List Entries 131
6.7.7.1. Gas List Entry Format and Definitions 131
6.7.7.2. Editing or Adding HESSEN Gas List Entries 132
6.7.7.3. Deleting HESSEN Gas List Entries 133
6.7.8. Setting Hessen Protocol Status Flags 134
6.7.9. Instrument ID 135
7. DATA ACQUISITION SYSTEM (DAS) AND APICOM 136
7.1. DAS STATUS 137
7.2. DAS Structure 137
7.3. DAS Channels 138
7.3.1. DAS Default Channels 139
7.3.2. SETUP →DAS →VIEW: Viewing DAS Channels and Individual Records 141
7.4. SETUP →DAS →EDIT: Accessing the DAS Edit Mode 142
7.4.1. Editing DAS Data Channel Names 143
7.4.2. Editing DAS Triggering Events 144
7.4.2.1. Editing DAS Parameters 145
7.4.3. Editing Sample Period and Report Period 147
7.4.4. Report Periods in Progress when Instrument Is Powered Off 148
7.4.5. Editing the Number of Records 148
7.4.6. RS-232 Report Function 150
7.4.7. Enabling / Disabling the HOLDOFF Feature 151
7.4.8. The Compact Report Feature 151
7.4.9. The Starting Date Feature 152
7.5. Disabling/Enabling Data Channels 152
7.6. Remote DAS Configuration 153
7.7. DAS Configuration Limits 153
8. REMOTE OPERATION 154
8.1. Computer Mode 154
8.1.1. Remote Control via APICOM 154
8.2. Interactive Mode 154
8.2.1. Remote Control via a Terminal Emulation Program 155
8.2.1.1. Help Commands in Interactive Mode 155
8.2.1.2. Command Syntax 156
8.2.1.3. Data Types 156
8.2.1.4. Status Reporting 157
8.3. Remote Access by Modem 158
8.4. Password Security for Serial Remote Communications 161
8.5. APICOM Remote Control Program 161
9. T400 CALIBRATION PROCEDURES 163
9.1. Before Calibration 164
9.1.1. Required Equipment, Supplies, and Expendables 164
9.1.2. Zero Air and Span Gas 164
9.2. Basic Manual Calibration Checks and Calibration of the Analyzer 165
9.2.1. Setup for Basic Calibration Checks and Calibration of the T400 analyzer 165
9.2.2. Performing a Basic Manual Calibration Check 166
9.2.3. Performing a Basic Manual Calibration 167
9.2.3.1. Setting the Expected O_3 Span Gas Concentration 167
9.2.3.2. Zero/Span Point Calibration Procedure 168
9.2.4. Manual Calibration Checks and Calibrations Using AUTO RANGE or DUAL RANGE Modes 169
9.3. Manual Calibration Check and Calibration with Valve Options 170

9.3.1. Setup for Calibration Checks and Calibration with Valve Options....170
9.3.2. Manual Calibration Checks with Valve Options Installed....172
9.3.3. Manual Calibration Using Valve Options....173
9.3.3.1. Setting the Expected O_3 Span Gas Concentration with the Z/S Option Installed....173
9.3.3.2. Zero/Span Point Calibration Procedure the Z/S Option Installed....174
9.3.3.3. Use of Zero/Span Valve with Remote Contact Closure....175
9.4. Automatic Zero/Span Cal/Check (AutoCal)....175
9.4.1. SETUP → ACAL: Programming and AUTO CAL....177
9.5. O_3 Photometer Electronic Calibration....179
9.5.1. Photometer Dark Calibration....179
9.5.2. O_3 Photometer Gas Flow Calibration....181
9.6. Calibrating the IZS Option O_3 Generator....182
9.7. EPA Protocol Calibration....183
10. INSTRUMENT MAINTENANCE....184
10.1. Maintenance Schedule....184
10.2. Predictive Diagnostics....186
10.3. Maintenance Procedures....186
10.3.1. Replacing the Sample Particulate Filter....187
10.3.2. Rebuilding the Sample Pump....188
10.3.3. Replacing the IZS Option Zero Air Scrubber....188
10.3.4. IZS Desiccant (Option 56)....189
10.3.5. Performing Leak Checks....189
10.3.5.1. Vacuum Leak Check and Pump Check....189
10.3.5.2. Pressure Leak Check....189
10.3.6. Performing a Sample Flow Check....191
10.3.7. Maintenance of the Photometer Absorption Tube....192
10.3.7.1. Cleaning or Replacing the Absorption Tube....192
10.3.8. Optical Bench UV Lamp Adjustment....193
10.3.9. Optical Bench UV Lamp Replacement....195
10.3.10. Adjustment or Replacement of Optional IZS Ozone Generator UV Lamp....196
11. TROUBLESHOOTING & SERVICE....199
11.1. General Troubleshooting....199
11.1.1. Fault Diagnosis with WARNING Messages....200
11.1.2. Fault Diagnosis With Test Functions....203
11.1.3. DIAG → SIGNAL I/O: Using the Diagnostic Signal I/O Function....205
11.2. Using the Analog Output Test Channel....207
11.3. Using the Internal Electronic Status LEDs....208
11.3.1. CPU Status Indicator....208
11.3.2. Relay PCA Status LEDs....208
11.3.2.1. I^2C Bus Watchdog Status LEDs....208
11.3.2.2. O_3 Option Status LED s....209
11.4. Gas Flow Problems....210
11.4.1. Typical Flow Problems....210
11.4.1.1. Flow is Zero....210
11.4.1.2. Low Flow....210
11.4.1.3. High Flow....211
11.4.1.4. Actual Flow Does Not Match Displayed Flow....211
11.4.1.5. Sample Pump....211
11.5. Calibration Problems....211
11.5.1. MisCalibrated....211
11.5.2. Non-Repeatable Zero and Span....211
11.5.3. Inability to Span – No Span Button (CALS)....212
11.5.4. Inability to Zero – No Zero Button (CALZ)....212
11.6. Other Performance Problems....212
11.6.1. Box Temperature....212
11.6.2. Sample Temperature....212
11.6.3. UV Lamp Temperature....213
11.6.3.1. IZS Ozone Generator Temperature (Optional)....213

11.7. Subsystem Checkout 214
11.7.1. AC Main Power 214
11.7.2. DC Power Supply 214
11.7.3. I²C Bus 215
11.7.4. Touchscreen Interface 216
11.7.5. LCD Display Module 216
11.7.6. Relay PCA 216
11.7.7. Photometer Pressure /Flow Sensor Assembly 217
11.7.8. Motherboard 218
11.7.8.1. Test Channel / Analog Outputs Voltage 218
11.7.8.2. A/D Functions 219
11.7.8.3. Status Outputs 219
11.7.8.4. Control Inputs 220
11.7.9. CPU 220
11.7.10. RS-232 Communications 221
11.7.10.1. General RS-232 Troubleshooting 221
11.7.10.2. Troubleshooting Analyzer/Modem or Terminal Operation 221
11.8. Trouble Shooting the Photometer 222
11.8.1. Checking Measure / Reference Valve 222
11.8.2. Checking The Photometer UV Lamp Power Supply 222
11.9. Trouble Shooting the IZS Option's O_3 generator 223
11.9.1. Checking The O_3 Generator UV Lamp Power Supply 223
11.10. Service Procedures 223
11.10.1. Repairing Sample Flow Control Assembly 223
11.10.2. Replacing The Standard Reference O_3 Scrubber 224
11.10.3. Replacing the IZS O_3 Scrubber 225
11.10.4. Replacing the Metal Wool Scrubber Option 225
11.10.5. Replacing the UV Lamp Driver Board 226
11.10.6. Disk-On-Module Replacement Procedure 227
11.11. FAQ's 228
11.12. Technical Assistance 229
12. THEORY OF OPERATION 230
12.1. Measurement Method 230
12.1.1. Calculating O_3 Concentration 230
12.1.2. The Photometer UV Absorption Path 232
12.1.3. The Reference / Measurement Cycle 233
12.1.4. Interferent Rejection 234
12.2. Pneumatic Operation 235
12.2.1. Sample Gas Air Flow 235
12.2.2. Flow Rate Control 236
12.2.2.1. Critical Flow Orifice 236
12.2.3. Particulate Filter 237
12.2.4. Pneumatic Sensors 237
12.2.4.1. Sample Pressure Sensor 237
12.2.4.2. Sample Flow Sensor 237
12.3. Electronic Operation 238
12.3.1. Overview 238
12.3.2. CPU 239
12.3.2.1. Disk-On-Module (DOM) 240
12.3.2.2. Flash Chip 240
12.3.3. Motherboard 241
12.3.3.1. A to D Conversion 241
12.3.3.2. Sensor Inputs 241
12.3.3.3. Thermistor Interface 241
12.3.3.4. Analog Outputs 242
12.3.3.5. External Digital I/O 242
12.3.3.6. I²C Data Bus 242
12.3.3.7. Power Up Circuit 243

12.3.4. Relay PCA 243
12.3.4.1. Status LEDs 245
12.3.4.2. Watchdog Circuitry 245
12.3.4.3. Valve Control 246
12.3.4.4. Heater Control 246
12.3.4.5. Thermocouple Inputs and Configuration Jumper (JP5) 247
12.3.5. Power Supply/Circuit Breaker 248
12.3.5.1. Power Switch/Circuit Breaker 249
12.3.6. AC Power Configuration 250
12.3.6.1. AC Configuration – Internal Pump (JP7) 251
12.3.6.2. AC Configuration – Heaters for Option Packages (JP6) 252
12.3.7. Photometer Layout and Operation 253
12.3.7.1. Photometer Electronic Operation 254
12.3.7.2. O_3 Photometer UV Lamp Power Supply 255
12.3.7.3. Photometer Temperature 256
12.3.7.4. Photometer Gas Pressure and Flow Rate 256
12.4. Front Panel Touchscreen/Display Interface 257
12.4.1. Front Panel Interface PCA 257
12.5. Software Operation 257
12.5.1. Adaptive Filter 258
12.5.2. Calibration - Slope and Offset 259

LIST OF FIGURES

Figure 3-1: Front Panel Layout 23
Figure 3-2: Display Screen and Touch Control 24
Figure 3-3: Touchscreen/Display Mapped to Menu Charts 26
Figure 3-4: Rear Panel Layout 27
Figure 3-5: T400 Internal Layout – Top View with IZS Option 29
Figure 3-6: Analog In Connector 31
Figure 3-7: T400 Analog Output Connector 32
Figure 3-8: Current Loop Option Installed 33
Figure 3-9: Status Output Connector 34
Figure 3-10: Energizing the T400 Control Inputs 35
Figure 3-11: Concentration Alarm Relay 36
Figure 3-12: Rear Panel Connector Pin-Outs for RS-232 Mode 39
Figure 3-13: CPU Connector Pin-Outs for RS-232 Mode 40
Figure 3-14: Jumper and Cables for Multidrop Configuration 42
Figure 3-15: RS-232-Multidrop PCA Host/Analyzer Interconnect Diagram 43
Figure 3-16: T400 Pneumatic Diagram – Basic Unit 45
Figure 3-17: T400 Pneumatic Diagram with Internal Zero/Span (IZS) Option (OPT-50G) 46
Figure 3-18: Gas Line Connections for the T400 Analyzer – Basic Configuration 47
Figure 3-19: Gas Line Connections for the T400 Analyzer with IZS Option (OPT-50G) 48
Figure 3-20: Gas Line Connections when the T400 Analyzer is Located in the Room Being Monitored 49
Figure 3-21: Gas Line Connections when the T400 Analyzer is Monitoring a Remote Location 50
Figure 3-22: T400 Pneumatic Diagram with Zero/Span Valve Option (OPT-50A) 63
Figure 3-23: Gas Line Connections for the T400 Analyzer with Zero/Span Valve Option (OPT 50A) 64
Figure 3-24: T400 Pneumatic Diagram with Internal Zero/Span (IZS) Option (OPT-50G) 66
Figure 4-1: Front Panel Display 68
Figure 4-2: Viewing T400 Test Functions 71
Figure 5-1: Analog Output Connector Pin Out 79
Figure 5-2: Accessing the DIAG Submenus 93
Figure 5-3: Accessing the Analog I/O Configuration Submenus 95
Figure 5-4: Setup for Calibrating Analog Output 99
Figure 5-5: Setup for Checking Current Output Signal Levels 101
Figure 5-6: Alternative Setup Using 250Ω Resistor for Checking Current Output Signal Levels 103

Figure 5-7. DIAG – Analog Inputs (Option) Configuration Menu 110
Figure 7-1: Default T400 DAS Channels Setup 140
Figure 7-2: APICOM User Interface for Configuring the DAS. 153
Figure 8-1: APICOM Remote Control Program Interface 162
Figure 9-1: Pneumatic Connections for Manual Calibration Checks without Z/S Valve or IZS Options 165
Figure 9-2: Gas Line Connections for the T400 Analyzer with Zero/Span Valve Option (OPT-50A) 170
Figure 9-3: Gas Line Connections for the T400 Analyzer with IZS Options (OPT-50G) 171
Figure 10-1 Replacing the Particulate Filter 187
Figure 10-2 Replacing the IZS Zero Air Scrubber 188
Figure 10-3: Optical Bench – Lamp Adjustment/ Installation 193
Figure 10-4: O_3 Generator UV Lamp 196
Figure 10-5: Location of O_3 Generator Adjustment Pot 197
Figure 11-1: Example of Signal I/O Function 206
Figure 11-2: CPU Status Indicator 208
Figure 11-3: Relay PCA Status LEDS Used for Troubleshooting 209
Figure 11-4: Location of DC Power Test Points on Relay PCA 215
Figure 11-5: Critical Flow Orifice Assembly (Instruments without IZS) 224
Figure 11-6: IZS O_3 Generator Zero Air Scrubber Location 225
Figure 11-7: UV Lamp Driver Board Replacement 226
Figure 12-1: O_3 Absorption Path 232
Figure 12-2: Reference / Measurement Gas Cycle 233
Figure 12-3: T400 Pneumatic Diagram – Basic Unit 235
Figure 12-4: Flow Control Assembly & Critical Flow Orifice 236
Figure 12-5: T400 Electronic Block Diagram 238
Figure 12-6. CPU Board 240
Figure 12-7: Relay PCA Layout (P/N 04523-0100) 243
Figure 12-8: Relay PCA P/N 045230100 with Safety Shield In Place 244
Figure 12-9: Relay PCA P/N 045230200 with AC Relay Retainer in Place 244
Figure 12-10: Status LED Locations – Relay PCA 245
Figure 12-11: Heater Control Loop Block Diagram 247
Figure 12-12: Thermocouple Configuration Jumper (JP5) Pin-Outs 248
Figure 12-13: Power Distribution Block Diagram 249
Figure 12-14: Location of AC power Configuration Jumpers 250
Figure 12-15: Pump AC Power Jumpers (JP7) 251
Figure 12-16: Typical Jumper Set (JP2) Set Up of Optional Metal Wool Scrubber Heater 252
Figure 12-17: O_3 Photometer Layout – Top Cover Removed 253
Figure 12-18: O_3 Photometer Electronic Block Diagram 254
Figure 12-19: O_3 Photometer UV Lamp Power Supply Block Diagram 255
Figure 12-20: Front Panel and Display Interface Block Diagram 257
Figure 12-21: Basic Software Operation 258

LIST OF TABLES

Table 1-1: Analyzer Options 15
Table 2-1: Model T400 Basic Unit Specifications 18
Table 2-2: IZS Generator Specifications *with* Reference Feedback Option 19
Table 2-3: IZS Generator Specifications *w/o* Reference Feedback Option 19
Table 3-1: Ventilation Clearance 22
Table 3-2: Display Screen and Touch Control Description 25
Table 3-3: Rear Panel Description 28
Table 3-4: Analog Input Pin Assignments 31
Table 3-5: Analog Output Pin Outs 32
Table 3-6: Status Output Pin Assignments 34
Table 3-7: Control Input Pin Assignments 36
Table 3-8: Possible Warning Messages at Start-Up 52

Table 3-9: Zero/Span Valve Operating States for Option 50A....63
Table 3-10: Internal Zero/Span Valve Operating States....67
Table 4-1: Analyzer Operating Modes....69
Table 4-2: Test Functions Defined....72
Table 4-3: Warning Messages Defined....73
Table 4-4: Primary Setup Mode Features and Functions....75
Table 4-5: Secondary Setup Mode Features and Functions....76
Table 5-1: Password Levels....85
Table 5-2: Variable Names (VARS)....90
Table 5-3: Diagnostic Mode (DIAG) Functions....92
Table 5-4: DIAG - Analog I/O Functions....94
Table 5-5: Voltage Tolerances for the TEST CHANNEL Calibration....99
Table 5-6: Current Loop Output Check....103
Table 5-7: Analog Output Voltage Range Min/Max....104
Table 5-8: Test Channel Functions Available on the T400's Analog Output....107
Table 6-1: COMM Port Communication Modes....112
Table 6-2: Ethernet Status Indicators....116
Table 6-3: LAN/Internet Default Configuration Properties....121
Table 6-4: RS-232 Communication Parameters for Hessen Protocol....127
Table 6-5: Teledyne API Hessen Protocol Response Modes....130
Table 6-6: Default Hessen Status Bit Assignments....134
Table 7-1: Front Panel LED Status Indicators for DAS....137
Table 7-2: DAS Data Channel Properties....138
Table 7-3: DAS Data Parameter Functions....145
Table 8-1: Terminal Mode Software Commands....155
Table 8-2: Teledyne API Serial I/O Command Types....156
Table 9-1: AutoCal Modes....175
Table 9-2: AutoCal Attribute Setup Parameters....176
Table 9-3: Example AutoCal Sequence....176
Table 10-1: T400 Maintenance Schedule....185
Table 10-2: Predictive Uses for Test Functions....186
Table 11-1: Warning Messages in Display Param Field....202
Table 11-2: Test Functions - Indicated Failures....204
Table 11-3: Test Channel Outputs as Diagnostic Tools....207
Table 11-4: Relay PCA Watchdog LED Failure Indications....208
Table 11-5: Relay PCA Status LED Failure Indications....209
Table 11-6: DC Power Test Point and Wiring Color Codes....214
Table 11-7: DC Power Supply Acceptable Levels....215
Table 11-8: Relay PCA Control Devices....216
Table 11-9: Analog Output Test Function - Nominal Values Voltage Outputs....218
Table 11-10: Status Outputs Check....219
Table 11-11: T400 Control Input Pin Assignments and Corresponding Signal I/O Functions....220
Table 12-1: Relay PCA Status LEDs....245
Table 12-2: Thermocouple Configuration Jumper (JP5) Pin-Outs....247
Table 12-3: Thermocouple Settings for Optional Metal Wool Scrubber....248
Table 12-4: AC Power Configuration for Internal Pumps (JP7)....251
Table 12-5: Power Configuration for Optional Metal Wool Scrubber Heater (JP6)....252

LIST OF APPENDICES

APPENDIX A - MENU TREES and RELATED SOFTWARE DOCUMENTATION
APPENDIX B - T400 INTERCONNECT DIAGRAM

1. INTRODUCTION, FEATURES AND OPTIONS

1.1. OVERVIEW

The Model T400 photometric ozone analyzer is a microprocessor-controlled analyzer that measures low ranges of ozone in ambient air using a method based on the Beer-Lambert law, an empirical relationship that relates the absorption of light to the properties of the material through which the light is traveling over a given distance.

The intensity of an ultra violet light is measured after it passes through a chamber, called the sample cell, where it is absorbed in proportion to the amount of ozone present. Every three seconds, a switching valve alternates measurement between a gas stream containing ozone and a stream that has been scrubbed of ozone.

The analyzer also measures the ambient temperature and pressure of the gas being measured. Using results of these measurements and the Beer-Lambert equation, the T400 analyzer calculates the amount of ozone present in the sampler gas.

The T400 analyzer's multi-tasking software gives the ability to track and report a large number of operational parameters in real time. These readings are compared to diagnostic limits kept in the analyzer's memory, whereby the analyzer issues automatic warnings should any fall outside of those limits.

Built-in data acquisition capability, using the analyzer's internal memory, allows the logging of multiple parameters including averaged or instantaneous concentration values, calibration data, and operating parameters such as pressure and flow rate. Stored data are easily retrieved through the serial port or Ethernet port via our APICOM software or from the front panel, allowing operators to perform predictive diagnostics and enhanced data analysis by tracking parameter trends. Multiple averaging periods of one minute to 365 days are available for over a period of one year.

1.2. FEATURES

Some of the exceptional features of your T400 photometric ozone analyzer include:

- Ranges, 0-100 ppb to 0-10 ppm, user selectable
- Single pass ultraviolet absorption
- Microprocessor controlled for versatility
- LCD Graphical User Interface with capacitive touch screen
- Multi-tasking software for viewing of test variables during operation
- Continuous self checking with alarms
- Bi-directional USB, RS-232, and 10/100Base-T Ethernet ports for remote operation (optional RS-485)

- Front panel USB ports for peripheral devices
- Digital status outputs providing instrument operating conditions
- Adaptive signal filtering to optimize response time
- Optional Internal Zero/Span check and dual span points
- Temperature and Pressure compensation
- Internal data logging with 1 min to 365 day multiple averages

1.3. OPTIONS

The options available for your analyzer are presented in Table 1-1 with name, option number, a description and/or comments, and if applicable, cross-references to technical details in this manual, such as setup and calibration. To order these options or to learn more about them, please contact the Sales department of Teledyne API at:

TOLL-FREE:	800-324-5190
TEL:	+1 858-657-9800
FAX:	+1 858-657-9816
E-MAIL:	api-sales@teledyne.com
WEB SITE:	http://www.teledyne-api.com/

Table 1-1: Analyzer Options

Option	Option Number	Description/Notes	Reference
Pumps		**Pumps meet all typical AC power supply standards while exhibiting same pneumatic performance.**	
	10A	External Pump 100V - 120V @ 60 Hz	N/A
	10B	External Pump 220V - 240V @ 50 Hz	N/A
	10C	External Pump 220V - 240V @ 60 Hz	N/A
	10D	External Pump 100V – 12V @ 50 Hz	N/A
	10E	External Pump 100V @ 60 Hz	N/A
	11	Pumpless, internal or external Pump Pack	N/A
	13	High Voltage Internal Pump 240V @ 50Hz	N/A
Rack Mount Kits		**Options for mounting the analyzer in standard 19” racks**	
	20A	Rack mount brackets with 26 in. chassis slides	N/A
	20B	Rack mount brackets with 24 in. chassis slides	N/A
	21	Rack mount brackets only (compatible with carrying strap, Option 29)	N/A
	23	Rack mount for external pump pack (no slides)	N/A

Option	Option Number	Description/Notes	Reference
Carrying Strap/Handle		**Side-mounted strap for hand-carrying analyzer**	
	29	Extends from "flat" position to accommodate hand for carrying. Recesses to 9mm (3/8") dimension for storage. Can be used with rack mount brackets, Option 21. Cannot be used with rack mount slides.	N/A
		CAUTION General Safety Hazard **A FULLY LOADED T400 WITH BOTH THE O_3 GENERATOR AND VALVE OPTIONS INSTALLED WEIGHS ABOUT 17 KG (40 POUNDS).** **TO AVOID PERSONAL INJURY WE RECOMMEND THAT TWO PERSONS LIFT AND CARRY THE ANALYZER.** **DISCONNECT ALL CABLES AND TUBING FROM THE ANALYZER BEFORE MOVING IT.**	
Analog Inputs		Used for connecting external voltage signals from other instrumentation (such as meteorological instruments).	
	64	Also can be used for logging these signals in the analyzer's internal DAS **64A** is USB Com Port only **64B** is Analog Input and USB Com Port together.	Sections 3.3.1.2 and 5.10.3
Current Loop Analog Outputs		**Adds isolated, voltage-to-current conversion circuitry to the analyzer's analog outputs.**	
	41	Can be configured for any output range between 0 and 20 mA. May be ordered separately for any of the analog outputs. Can be installed at the factory or retrofitted in the field.	Sections 3.3.1.4, and 5.10.1.5
Parts Kits		**Spare parts and expendables**	
	42A	**Expendables Kit** includes a recommended set of expendables for one year of operation of this instrument including replacement sample particulate filters.	Appendix B
	43	**Expendables Kit with IZS** includes the items needed to refurbish the internal zero air scrubber (IZS) that is included.	Appendix B
	45	**Spare Parts Kit** includes spares parts for one unit.	Appendix B
Calibration Valves		**Used to control the flow of calibration gases generated from external sources, rather than manually switching the rear panel pneumatic connections.**	
	50A	Ambient Zero and Ambient Span	Section 3.6.1
	50F	Zero Scrubber and No span (IZ) (CY5) (measures low levels of O_3 in ambient air; special order).	N/A (Call Sales)
	50G	Zero Scrubber and Internal Span Source (IZS)	Section 3.6.2
	56	Desiccant Dryer for IZS (desiccant material in a scrubber cartridge)	Section 10.3.4
Communication Cables		**For remote serial, network and Internet communication with the analyzer.**	
		Type: Description	
	60A	RS-232: Shielded, straight-through DB-9F to DB-25M cable, about 1.8 m long. Used to interface with older computers or code activated switches with DB-25 serial connectors.	Section 3.3.1.8
	60B	RS-232: Shielded, straight-through DB-9F to DB-9F cable of about 1.8 m length.	Section 3.3.1.8
	60C	Ethernet: Patch cable, 2 meters long, used for Internet and LAN communications.	Section 3.3.1.8
	60D	USB: Cable for direct connection between instrument (rear panel USB port) and personal computer.	Section 3.3.1.8
Concentration Alarm Relay		**Issues warning when gas concentration exceeds limits set by user.**	

Option	Option Number	Description/Notes	Reference
	61	Four (4) "dry contact" relays on the rear panel of the instrument. This relay option is different from and in addition to the "Contact Closures" that come standard on all TAPI instruments.	Section 3.3.1.7
RS-232 Multidrop		**Enables communications between host computer and up to eight analyzers.**	
	62	Multidrop card seated on the analyzer's CPU card. Each instrument in the multidrop network requires this card and a communications cable (Option 60B).	Section 3.3.1.8
Additional Option		**To replace manganese dioxide scrubber.**	
	68	Metal Scrubber – a heated metal wool scrubber that functions like a catalytic converter and improves the analyzer's performance in some higher humidity applications.	
Special Features		**Built in features, software activated**	
	N/A	**Maintenance Mode Switch**, located inside the instrument, places the analyzer in maintenance mode where it can continue sampling, yet ignore calibration, diagnostic, and reset instrument commands. This feature is of particular use for instruments connected to Multidrop or Hessen protocol networks. Call Technical Support for activation.	N/A
	N/A	**Second Language Switch** activates an alternate set of display messages in a language other than the instrument's default language. Call Technical Support for a specially programmed Disk on Module containing the second language.	N/A

2. SPECIFICATIONS, APPROVALS & COMPLIANCE

This section presents specifications for the T400 analyzer and its options, Agency approvals, EPA equivalency designation, and CE mark compliance.

2.1. SPECIFICATIONS

Table 2-1: Model T400 Basic Unit Specifications

Parameter	Specification	
Ranges	Min: 0-100 ppb Full scale Max: 0-10 ppm Full scale (selectable, dual ranges and auto-ranging supported)	
Measurement Units	ppb, ppm, µg/m^3, mg/m^3 (selectable)	
Zero Noise	< 0.2 ppb (RMS) (with 80 Sample Digital Filter)	
Span Noise	< 0.5% of reading (RMS) above 100 ppb	
Lower Detectable Limit	< 0.4 ppb (with 80 Sample Digital Filter)	
Zero Drift	< 1.0 ppb/24 hours	
Span Drift	< 1% of reading/24 hours	
Lag Time	< 10 sec	
Rise/Fall Time	< 20 sec to 95%	
Linearity	1% of full scale	
Precision	< 0.5% of reading above 100 ppb	
Sample Flow Rate	800 cc/min ±10%	
Power Requirements	Rating	Typical Power Consumption
	110 - 120 V~ 60 Hz 3.0 A 220 - 240 V~ 50 Hz 3.0 A 220 - 240 V~ 60 Hz 3.0 A	110 W 112 W 112 W
Analog Output Ranges	10V, 5V, 1V, 0.1V (selectable)	
Recorder Offset	±10%	
Standard I/O	1 Ethernet: 10/100Base-T 2 RS-232 (300 – 115,200 baud) 2 USB device ports 8 opto-isolated digital outputs 6 opto-isolated digital inputs (3 defined, 3 spare) 4 analog outputs	
Optional I/O	1 USB com port 1 RS485 8 analog inputs (0-10V, 12-bit) 4 digital alarm outputs Multidrop RS232 3 4-20mA current outputs	
Operating Temperature Range	5 - 40°C (with EPA Equivalency)	
Humidity Range	0-90% RH, Non-Condensing	
Pressure Range	25 – 31 “Hg-A	

Parameter	Specification
Temp Coefficient	< 0.05% per deg C
Voltage Coefficient	< 0.05% per Volt AC (RMS) over range of nominal ± 10%
Dimensions (H x W x D)	7” x 17” x 23.5” (178 x 432 x 597 mm)
Weight	28 lbs (12.7 kg) 30.6lbs. (13.8kg) with IZS Option
Environmental Conditions	Installation Category (Over voltage Category) II Pollution Degree 2 Intended for indoor use only at altitudes ≤ 2000m

Table 2-2: IZS Generator Specifications *with* Reference Feedback Option

Parameter	Specification
Maximum Concentration	1.0 ppm
Minimum Concentration	0.050 ppm
Resolution	0.5 ppb
Repeatability (7 days)	1% of reading
Initial Accuracy	+/- 5% of target concentration
Response Time	< 5 min to 95%

Table 2-3: IZS Generator Specifications *w/o* Reference Feedback Option

Parameter	Specification
Maximum Concentration	1.0 ppm
Minimum Concentration	0.050 ppm
Resolution	0.5 ppb
Repeatability (7 days)	2% of reading
Initial Accuracy	+/- 10% of target concentration
Response Time	< 5 min to 95%

2.2. EPA EQUIVALENCY DESIGNATION

The T400 photometric ozone analyzer is officially designated as US EPA Federal Equivalent Method (FEM), Designation Number EQOA-0992-087. The official List of Designated Reference and Equivalent Methods is published in the U.S. Federal Register – http://www3.epa.gov/ttn/amtic/criteria.html.

2.3. APPROVALS AND CERTIFICATIONS

The Teledyne API Model T400 analyzer was tested and certified for Safety and Electromagnetic Compatibility (EMC). This section presents the compliance statements for those requirements and directives.

2.3.1. SAFETY

IEC 61010-1:2010 (3rd Edition), Safety requirements for electrical equipment for measurement, control, and laboratory use.

CE: 2006/95/EC, Low-Voltage Directive

2.3.2. EMC

EN 61326-1 (IEC 61326-1), Class A Emissions/Industrial Immunity

EN 55011 (CISPR 11), Group 1, Class A Emissions

FCC 47 CFR Part 15B, Class A Emissions

CE: 2004/108/EC, Electromagnetic Compatibility Directive

2.3.3. OTHER TYPE CERTIFICATIONS

MCERTS:

EN 15267 Air Quality – Automated Measuring Systems

EN 14625 Ambient Air

Sira MC 050070/08

For additional certifications, please contact Technical Support.

3. GETTING STARTED

This section addresses the procedures for unpacking the instrument and inspecting for damage, presents clearance specifications for proper ventilation, introduces the instrument layout, then presents the procedures for getting started: making electrical and pneumatic connections, and conducting an initial calibration check.

3.1. UNPACKING THE T400 ANALYZER

CAUTION – GENERAL SAFETY HAZARD

To avoid personal injury, always use two persons to lift and carry the Model T400.

ATTENTION

COULD DAMAGE INSTRUMENT AND VOID WARRANTY

Printed Circuit Assemblies (PCAs) are sensitive to electro-static discharges too small to be felt by the human nervous system. Failure to use ESD protection when working with electronic assemblies will void the instrument warranty. Refer to the Primer on Electro-static Discharge manual, downloadable from our website at http://www.teledyne-api.com under Help Center > Product Manuals in the Special Manuals section, for more information on preventing ESD damage.

CAUTION - ELECTRICAL SHOCK HAZARD

Never disconnect PCAs, wiring harnesses or electronic subassemblies while under power.

Note

Teledyne API recommends that you store shipping containers/materials for future use if/when the instrument should be returned to the factory for repair and/or calibration service. See Warranty section in this manual and shipping procedures on our Website at http://www.teledyne-api.com under Customer Support > Return Authorization.

Verify that there is no apparent external shipping damage. If damage has occurred, please advise the shipper first, then Teledyne API.

Included with your analyzer is a printed record of the final performance characterization performed on your instrument at the factory. This record, titled *Final Test and Validation Data Sheet* (P/N 04314) is an important quality assurance and calibration record for this instrument. It should be placed in the quality records file for this instrument.

With no power to the unit, carefully remove the top cover of the analyzer and check for internal shipping damage by carrying out the following steps:

1. Remove the setscrew located in the top, center of the Front panel.
2. Remove the two screws fastening the top cover to the unit (one per side towards the rear).
3. Slide the cover backwards until it clears the analyzer's front bezel.
4. Lift the cover straight up.
5. Inspect the interior of the instrument to make sure all circuit boards and other components are in good shape and properly seated.
6. Check the connectors of the various internal wiring harnesses and pneumatic hoses to make sure they are firmly and properly seated.
7. Verify that all of the optional hardware ordered with the unit has been installed. These are listed on the paperwork accompanying the analyzer.

3.1.1. VENTILATION CLEARANCE

Whether the analyzer is set up on a bench or installed into an instrument rack, be sure to leave sufficient ventilation clearance.

Table 3-1: Ventilation Clearance

AREA	MINIMUM REQUIRED CLEARANCE
Back of the instrument	**4 in.**
Sides of the instrument	**1 in.**
Above and below the instrument	**1 in.**

Various rack mount kits are available for this analyzer. See Table 1-1 of this manual for more information.

3.2. INSTRUMENT LAYOUT

Instrument layout includes front panel and display, rear panel connectors, and internal chassis layout.

3.2.1. FRONT PANEL

Figure 3-1 shows the analyzer's front panel layout, followed by a close-up of the display screen in Figure 3-2, which is described in Table 3-2. The two USB ports on the front panel are provided for the connection of peripheral devices:

- plug-in mouse (not included) to be used as an alternative to the touchscreen interface
- thumb drive (not included) to download updates to instruction software (contact TAPI Technical Support for information).

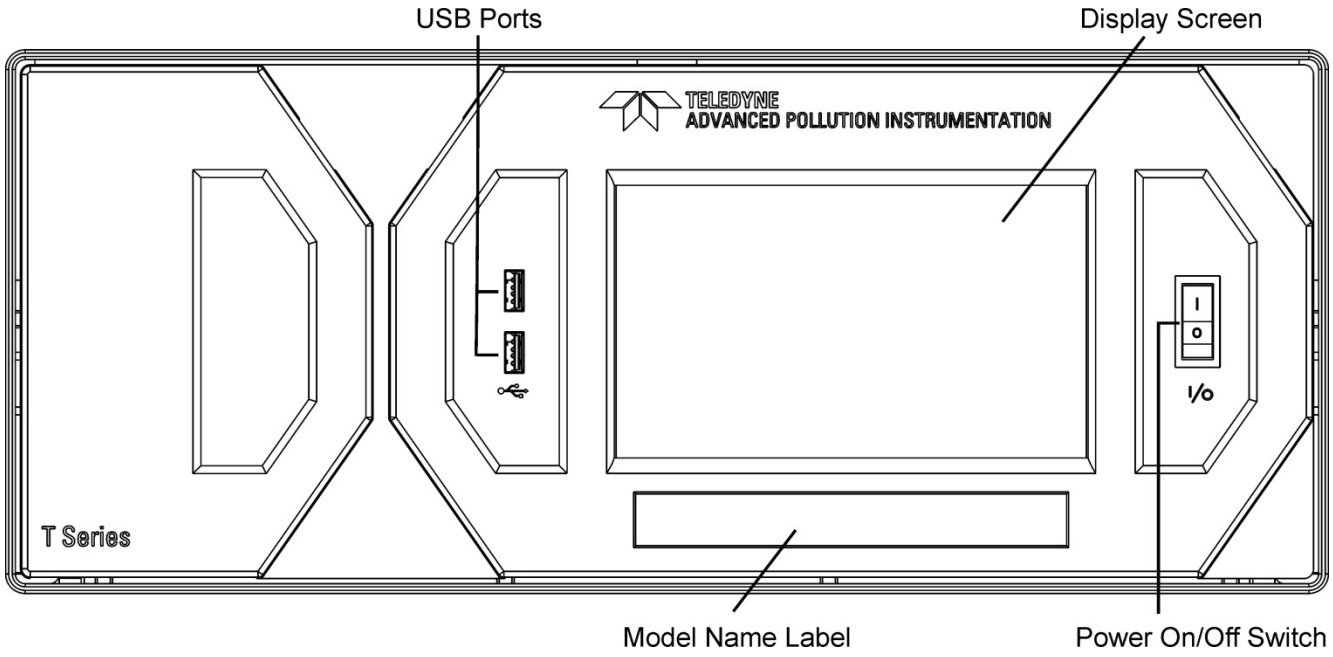

Figure 3-1: Front Panel Layout

Figure 3-2: Display Screen and Touch Control

The front panel liquid crystal display screen includes touch control. Upon analyzer start-up, the screen shows a splash screen and other initialization indicators before the main display appears, similar to Figure 3-2 above (may or may not display a Fault alarm). The LEDs on the display screen indicate the Sample, Calibration and Fault states; also on the screen is the gas concentration field (Conc), which displays real-time readouts for the primary gas and for the secondary gas if installed. The display screen also shows what mode the analyzer is currently in, as well as messages and data (Param). Along the bottom of the screen is a row of touch control buttons; only those that are currently applicable will have a label. Table 3-2 provides detailed information for each component of the screen.

ATTENTION

COULD DAMAGE INSTRUMENT AND VOID WARRANTY

Do not use hard-surfaced instruments such as pens to touch the control buttons.

Table 3-2: Display Screen and Touch Control Description

Field	Description/Function			
Status	LEDs indicating the states of Sample, Calibration and Fault, as follows:			
	Name	Color	State	Definition
	SAMPLE	Green	Off	Unit is not operating in sample mode, DAS is disabled.
			On	Sample Mode active; Front Panel Display being updated; DAS data being stored.
			Blinking	Unit is operating in sample mode, front panel display being updated, DAS hold-off mode is ON, DAS disabled
	CAL	Yellow	Off	Auto Cal disabled
			On	Auto Cal enabled
			Blinking	Unit is in calibration mode
	FAULT	Red	Off	No warnings exist
			Blinking	Warnings exist
Conc	Displays the actual concentration of the sample gas currently being measured by the analyzer in the currently selected units of measure			
Mode	Displays the name of the analyzer's current operating mode			
Param	Displays a variety of informational messages such as warning messages, operational data, test function values and response messages during interactive tasks.			
Control Buttons	Displays dynamic, context sensitive labels on each button, which is blank when inactive until applicable.			

Figure 3-3 shows how the front panel display is mapped to the menu charts illustrated in this manual. The Mode, Param (parameters), and Conc (gas concentration) fields in the display screen are represented across the top row of each menu chart. The eight touch control buttons along the bottom of the display screen are represented in the bottom row of each menu chart.

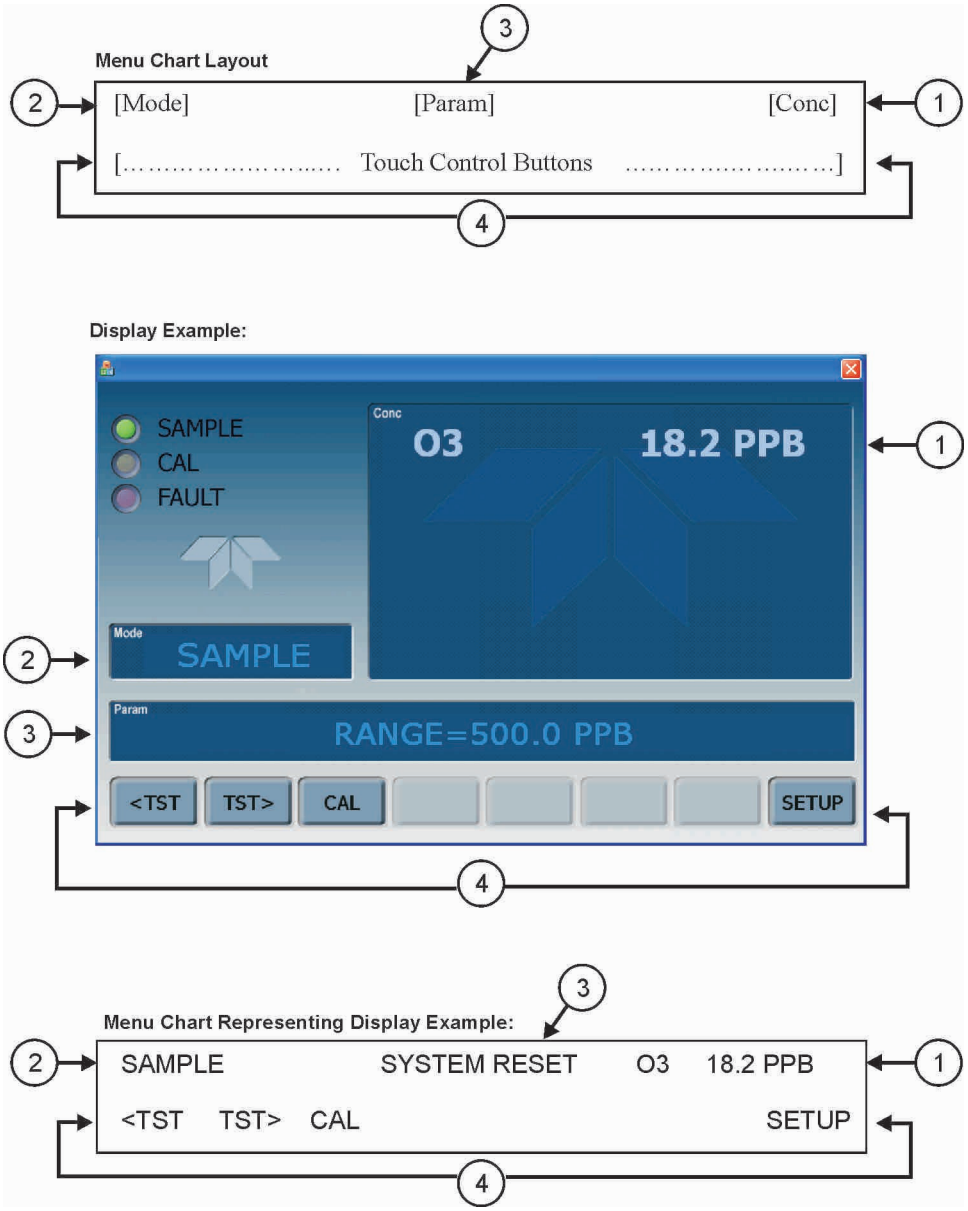

Figure 3-3: Touchscreen/Display Mapped to Menu Charts

Note

The menu charts in this manual contain condensed representations of the analyzer's display during the various operations being described. These menu charts are not intended to be exact visual representations of the actual display.

3.2.2. **REAR PANEL**

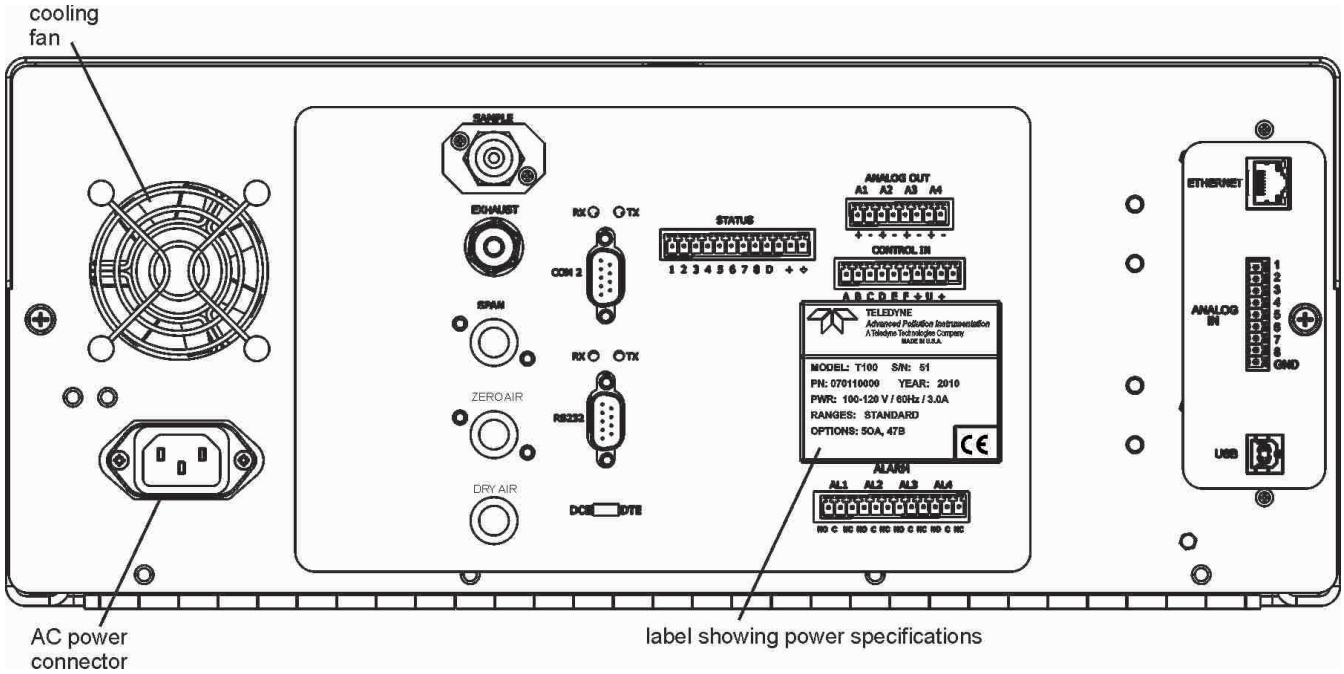

Figure 3-4: Rear Panel Layout

Table 3-3 provides a description of each component on the rear panel.

Table 3-3: Rear Panel Description

Component	Function
cooling fan	Pulls ambient air into chassis through side vents and exhausts through rear.
AC power connector	Connector for three-prong cord to apply AC power to the analyzer. **CAUTION! The cord's power specifications (specs) MUST comply with the power specs on the analyzer's rear panel model number label.**
Model/specs label	Identifies the analyzer model number and provides power specs
SAMPLE	Connect a gas line from the source of sample gas here. Calibration gases are also inlet here on units with the zero/span valve option installed.
EXHAUST	Connect an exhaust gas line of not more than 10 meters long here that leads outside the shelter or immediate area surrounding the instrument.
SPAN	On units with zero/span valve option installed, connect a gas line to the source of calibrated span gas here.
ZERO AIR	Internal Zero Air: On units with zero/span valve option installed connect the source of zero air here.
DRY AIR	On units with zero/span valve option installed connect the source of dry air here (- <20°C dew point).
RX TX	LEDs indicate receive (RX) and transmit (TX) activity on the when blinking.
COM 2	Serial communications port for RS-232 or RS-485.
RS-232	Serial communications port for RS-232 only
DCE DTE	Switch to select either data terminal equipment or data communication equipment during RS-232 communication.
STATUS	For ouputs to devices such as Programmable Logic Controllers (PLCs).
ANALOG OUT	For voltage or current loop outputs to a strip chart recorder and/or a data logger.
CONTROL IN	For remotely activating the zero and span calibration modes.
ALARM	Option for concentration alarms and system warnings.
ETHERNET	Connector for network or Internet remote communication, using Ethernet cable.
ANALOG IN	Option for external voltage signals from other instrumentation and for logging these signals.
USB	Connector for direct connection to laptop computer, using USB cable.
Information Label	Includes voltage and frequency specifications

3.2.3. INTERNAL CHASSIS LAYOUT

CAUTION – UV Radiation Risk
Do not look directly at the light of the UV lamp. Use UV adequate protection.

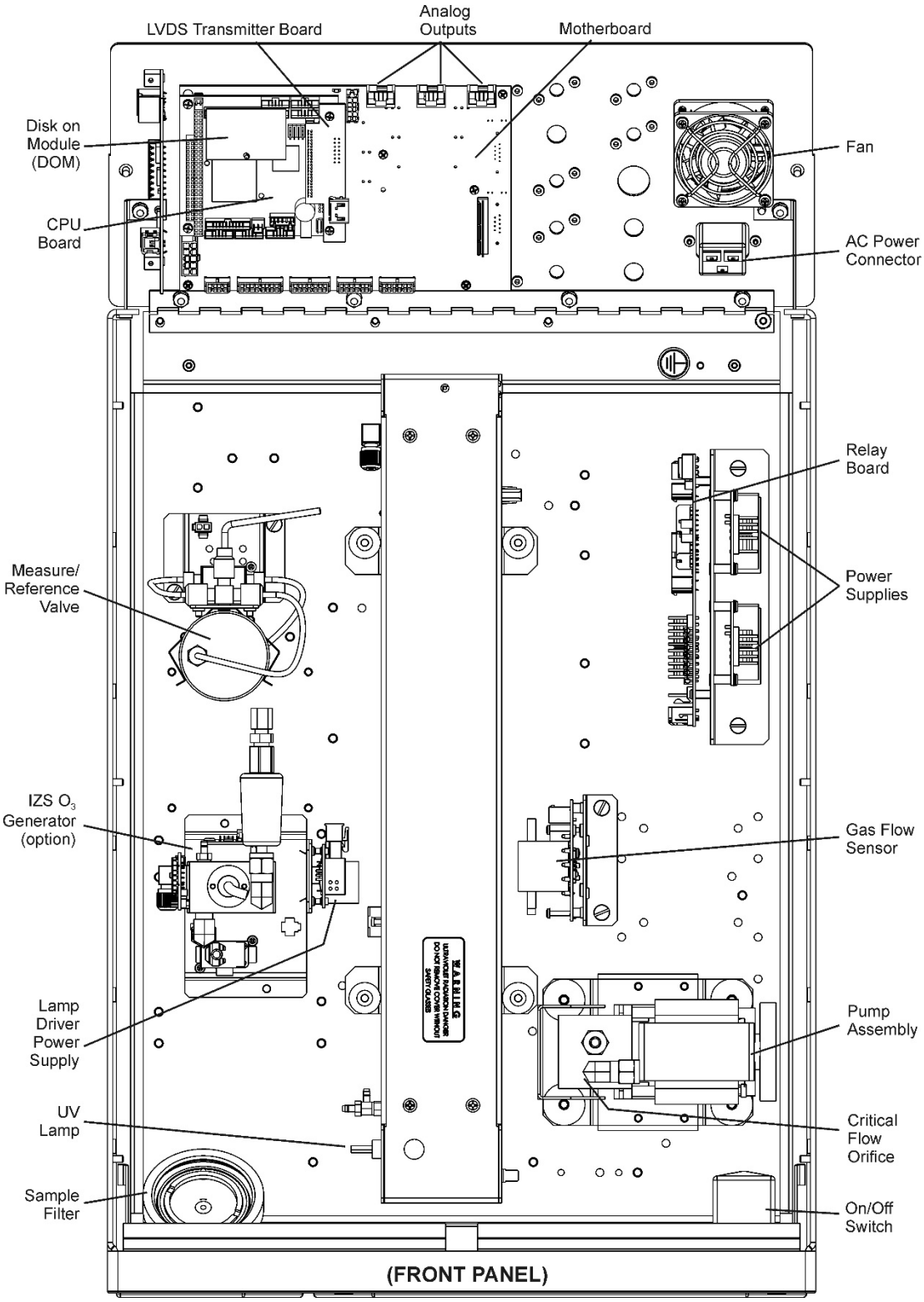

Figure 3-5: T400 Internal Layout – Top View with IZS Option

3.3. CONNECTIONS AND SETUP

This section presents the electrical (Section 3.3.1) and pneumatic (Section 3.3.2) connections for setup and preparing for instrument operation.

3.3.1. ELECTRICAL CONNECTIONS

Note **To maintain compliance with EMC standards, it is required that the cable length be no greater than 3 meters for all I/O connections, which include Analog In, Analog Out, Status Out, Control In, Ethernet/LAN, USB, RS-232, and RS-485.**

This section provides instructions for basic connections and for options.

3.3.1.1. Connecting Power

Attach the power cord to the analyzer and plug it into a power outlet capable of carrying at least 10 A current at your AC voltage and that it is equipped with a functioning earth ground.

WARNING - ELECTRICAL SHOCK HAZARD

HIGH VOLTAGES ARE PRESENT INSIDE THE INSTRUMENT

- **Ensure that the power cord being used is capable of carrying the power rating of the instrument (see Specifications TABLE 2-1)**
- **Power connection must have functioning ground connection.**
- **Do not defeat the ground wire on power plug.**
- **Turn off analyzer power before disconnecting or connecting electrical subassemblies.**
- **Do not operate with cover off.**
- **Ensure that installation provides access to disconnect power from the instrument.**

CAUTION - GENERAL SAFETY HAZARD

To avoid damage to your analyzer, make sure that the AC power voltage matches the voltage indicated on the analyzer's rear panel label before plugging the T400 into line power.

3.3.1.2. Connecting Analog Inputs (Option)

The Analog In connector is used for connecting external voltage signals from other instrumentation (such as meteorological instruments) and for logging these signals in the analyzer's internal Data Acquisition System (DAS). The input voltage range for each analog input is 0-10 VDC.

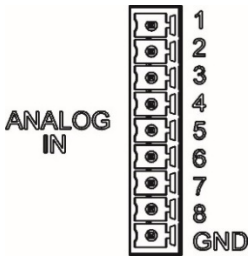

Figure 3-6: Analog In Connector

Pin assignments for the Analog In connector are presented in Table 3-4.

Table 3-4: Analog Input Pin Assignments

PIN	DESCRIPTION	DAS PARAMETER [1]
1	Analog input # 1	AIN 1
2	Analog input # 2	AIN 2
3	Analog input # 3	AIN 3
4	Analog input # 4	AIN 4
5	Analog input # 5	AIN 5
6	Analog input # 6	AIN 6
7	Analog input # 7	AIN 7
8	Analog input # 8	AIN 8
GND	Analog input Ground	N/A
[1] See Section 7.6 for details on setting up the DAS.		

3.3.1.3. Connecting Analog Outputs

The T400 is equipped with several analog output channels accessible through a connector on the rear panel.

Channels **A1** and **A2** output a signal that is proportional to the O_3 concentration of the sample gas.

- The default analog output voltage setting of these channels is 0 to 5 VDC with a reporting range of 0 to 500 ppb.
- An optional Current Loop output is available for each.

The output labeled **A4** is special. It can be set by the user to output any one a variety of diagnostic test functions.

- The default analog output voltage setting of these channels is also 0 to 5 VDC.
- See Section 5.10.1.9 for a list of available functions and their associated reporting range.
- There is no optional Current Loop output available for Channel **A4**.

To access these signals attach a strip chart recorder and/or data-logger to the appropriate analog output connections on the rear panel of the analyzer. Pin-outs for the analog output connector are:

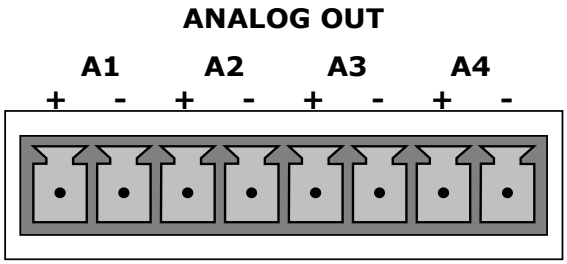

Figure 3-7: T400 Analog Output Connector

Table 3-5: Analog Output Pin Outs

Pin	Analog Output	Standard Voltage Output	Current Loop Option
1	A1	V Out	I Out +
2		Ground	I Out -
3	A2	V Out	I Out +
4		Ground	I Out -
5	A3	NOT USED	
6			
7	A4	V Out	Not Available
8		Ground	Not Available

To change the settings for the analog output channels, see Section 5.10

3.3.1.4. Current Loop Analog Outputs (Option 41) Setup

A current loop option is available and can be installed as a retrofit for each of the analog outputs of the analyzer. This option converts the DC voltage analog output to a current signal with 0-20 mA output current. The outputs can be scaled to any set of limits within that 0-20 mA range. However, most current loop applications call for either 2-20 mA or 4-20 mA range. All current loop outputs have a +5% over-range. Ranges with the lower limit set to more than 1 mA (e.g., 2-20 or 4-20 mA) also have a -5% under-range,

Figure 3-8 provides installation instructions and illustrates a sample combination of one current output and two voltage outputs configuration. This section also provides instructions for converting current loop analog outputs to standard 0-to-5 VDC outputs. Information on calibrating or adjusting these outputs can be found in Section 5.10.1.5

CAUTION – AVOID INVALIDATING WARRANTY

Servicing or handling of circuit components requires electrostatic discharge protection, i.e. ESD grounding straps, mats and containers. Failure to use ESD protection when working with electronic assemblies will void the instrument warranty. Refer to the Primer on Electro-static Discharge manual, downloadable from our website at http://www.teledyne-api.com under Help Center > Product Manuals in the Special Manuals section, for more information on preventing ESD damage.

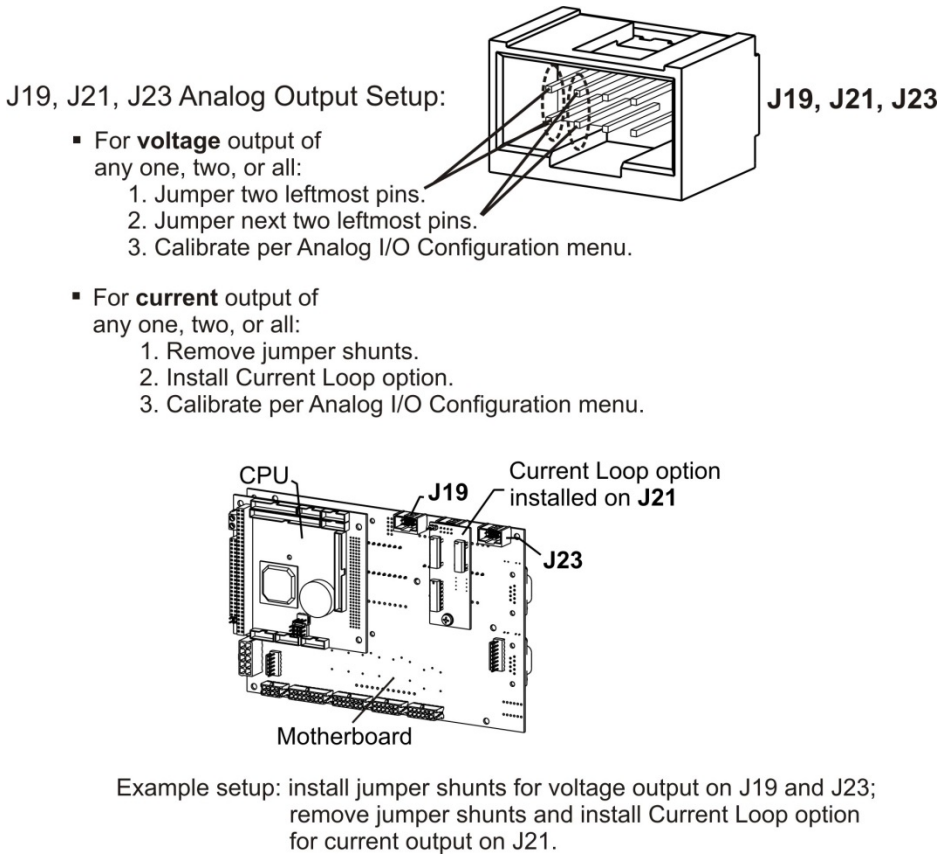

Figure 3-8: Current Loop Option Installed

CONVERTING CURRENT LOOP ANALOG OUTPUTS TO STANDARD VOLTAGE OUTPUTS

To convert an output configured for current loop operation to the standard 0 to 5 VDC output operation:

1. Turn off power to the analyzer.
2. If a recording device was connected to the output being modified, disconnect it.
3. Remove the top cover
   - Remove the set screw located in the top, center of the rear panel
   - Remove the screws fastening the top cover to the unit (one per side).
   - Slide the cover back and lift the cover straight up.
4. Disconnect the current loop option PCA from the appropriate connector on the motherboard (see Figure 3-8).
5. Place a shunt between the leftmost two pins of the connector (see Figure 3-8).
   - 6 spare shunts (P/N CN0000132) were shipped with the instrument attached to JP1 on the back of the instruments touchscreen and display PCA
6. Reattach the top case to the analyzer.
7. The analyzer is now ready to have a voltage-sensing, recording device attached to that output.
8. Calibrate the analog output as described in Section 5.10.1.1.

3.3.1.5. **Connecting the Status Outputs**

The status outputs report analyzer conditions via optically isolated NPN transistors, which sink up to 50 mA of DC current. These outputs can be used interface with devices that accept logic-level digital inputs, such as programmable logic controllers (PLCs). Each Status bit is an open collector output that can withstand up to 40 VDC. All of the emitters of these transistors are tied together and available at D.

ATTENTION

COULD DAMAGE INSTRUMENT AND VOID WARRANTY

Most PLC's have internal provisions for limiting the current that the input will draw from an external device. When connecting to a unit that does not have this feature, an external dropping resistor must be used to limit the current through the transistor output to less than 50 mA. At 50 mA, the transistor will drop approximately 1.2V from its collector to emitter.

The status outputs are accessed via a 12-pin connector (Figure 3-9) on the analyzer's rear panel, labeled STATUS (Figure 3-4). Each pin's function is defined in Table 3-6.

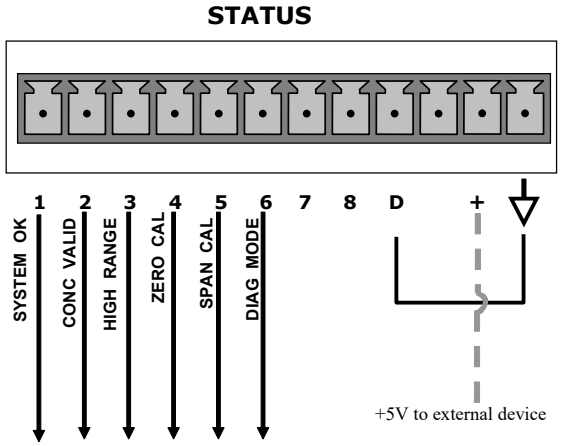

Figure 3-9: Status Output Connector

Table 3-6: Status Output Pin Assignments

OUTPUT #	STATUS DEFINITION	CONDITION
1	**SYSTEM OK**	ON if no faults are present.
2	**CONC VALID**	ON if O_3 concentration measurement is valid. If the O_3 concentration measurement is invalid, this bit is OFF.
3	**HIGH RANGE**	ON if unit is in high range of DUAL or AUTO Range Modes.
4	**ZERO CAL**	ON whenever the instrument is in **CALZ** mode.
5	**SPAN CAL**	ON whenever the instrument is in **CALS** mode.
6	**DIAG MODE**	ON whenever the instrument is in DIAGNOSTIC mode.
7 & 8	Unassigned	
D	Emitter BUSS	The emitters of the transistors on pins 1 to 8 are bussed together.
	Spare	
+	DC Power	+ 5 VDC, 300 mA source (combined rating with Control Output, if used).
⏚	Digital Ground	The ground level from the analyzer's internal DC power supplies. This connection should be used as the ground return when +5 VDC power is used.

3.3.1.6. Connecting the Control Inputs

The analyzer is equipped with three digital control inputs that can be used to activate the To remotely activate the zero and span calibration modes, several digital control inputs are provided through a 10-pin connector labeled **CONTROL IN** on the analyzer's rear panel.

There are two methods for energizing the control inputs: internal or external. The internal +5V available from the pin labeled "+" is the most convenient method (Figure 3-10, left). However, if full isolation is required, an external 5 VDC power supply should be used (Figure 3-10, right) to ensure that these inputs are truly isolated.

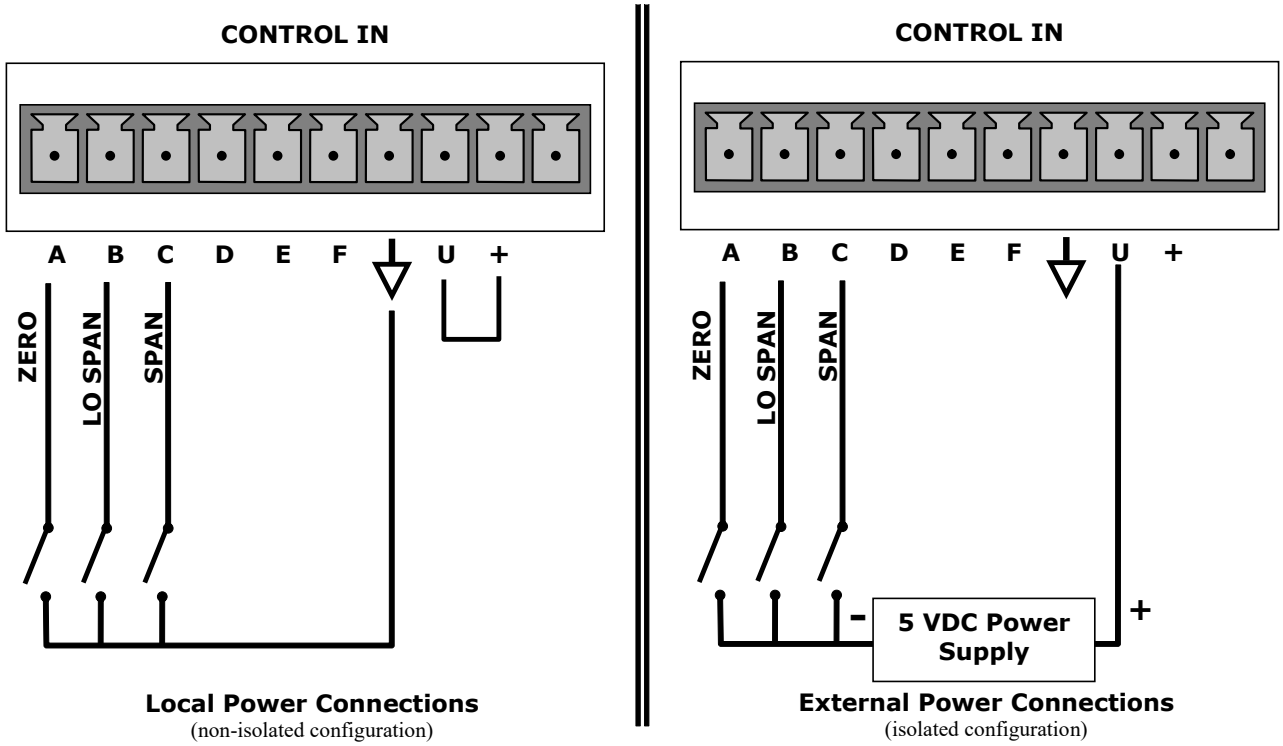

Figure 3-10: Energizing the T400 Control Inputs

Table 3-7: Control Input Pin Assignments

Input #	Status Definition	ON Condition
A	**REMOTE ZERO CAL**	The Analyzer is placed in Zero Calibration mode. The mode field of the display will read **ZERO CAL R**.
B	**REMOTE LO SPAN CAL**	The Analyzer is placed in Lo Span Calibration mode. The mode field of the display will read **LO CAL R**.
C	**REMOTE SPAN CAL**	The Analyzer is placed in Span Calibration mode. The mode field of the display will read **SPAN CAL R**.
D, E & F	Spare	
⏚	Digital Ground	The ground level from the analyzer's internal DC Power Supplies (same as chassis ground).
U	External Power input	Input pin for +5 VDC required to activate pins A – F.
+	5 VDC output	Internally generated 5V DC power. To activate inputs A – F, place a jumper between this pin and the "U" pin. The maximum amperage through this port is 300 mA (combined with the analog output supply, if used).

3.3.1.7. Connecting the Concentration Alarm Relay (Option 61)

The concentration alarm option is comprised of four "dry contact" relays on the rear panel of the instrument. This relay option is different from and in addition to the "Contact Closures" that come standard on all Teledyne API instruments. Each relay has three pins: Normally Open (NO), Common (C) and Normally Closed (NC).

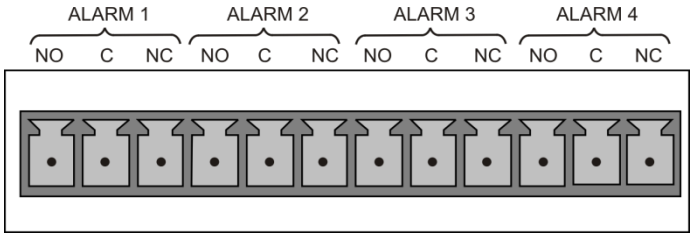

Figure 3-11: Concentration Alarm Relay

Alarm 1 **"System OK 2"**

Alarm 2 **"Conc 1"**

Alarm 3 **"Conc 2"**

Alarm 4 **"Range Bit"**

"ALARM 1" RELAY

Alarm 1, which is "System OK 2" (system OK 1 is the status bit), is in the energized state when the instrument is "OK" and there are no warnings. If there is a warning active or if the instrument is placed in "DIAG" mode, Alarm 1 will change states. This alarm has "reverse logic," meaning that if you put a meter across the Common and Normally Closed pins on the connector you will find that it is OPEN when the instrument is OK. This is so that if the instrument should turn off or lose power, it will change states and you can record this with a data logger or other recording device.

"ALARM 2" RELAY & "ALARM 3" RELAY

Alarm 2 relay is associated with the "Concentration Alarm 1" set point in the software; Alarm 3 relay is associated with the "Concentration Alarm 2" set point in the software.

Alarm 2 Relay **O_3 Alarm 1 = xxx PPM**

Alarm 3 Relay **O_3 Alarm 2 = xxx PPM**

Alarm 2 Relay **O_3 Alarm 1 = xxx PPM**

Alarm 3 Relay **O_3 Alarm 2 = xxx PPM**

Alarm 2 relay will be turned on any time the concentration value exceeds the set-point, and will return to its normal state when the concentration value returns below the concentration set-point.

Even though the relay on the rear panel is a NON-Latching alarm and resets when the concentration goes back below the alarm set point, the warning on the front panel of the instrument will remain latched until it is cleared. You can clear the warning on the front panel either manually by pressing the CLR button on the front panel touch-screen or remotely through the serial port.

The software for this instrument is flexible enough to allow you to configure the alarms so that you can have two alarm levels for each concentration.

O_3 Alarm 1 = 2 PPM

O_3 Alarm 2 = 10 PPM

O_3 Alarm 1 = 2 PPM

O_3 Alarm 2 = 10 PPM

In this example, **O_3** Alarm 1 and **O_3** Alarm 1 will both be associated with the "Alarm 2" relay on the rear panel. This allows you to have multiple alarm levels for individual concentrations.

A more likely configuration for this would be to put one concentration on the "Alarm 1" relay and the other concentration on the "Alarm 2" relay.

O_3 Alarm 1 = 2 PPM

O_3 Alarm 2 = Disabled

O_3 Alarm 1 = Disabled

O_3 Alarm 2 = 10 PPM

"ALARM 4" RELAY

This relay is connected to the "range bit". If the instrument is configured for "Auto Range" and the reading goes up into the high range, it will turn this relay on.

3.3.1.8. Connecting the Communications Interfaces

The T-Series analyzers are equipped with connectors for remote communications interfaces: **Ethernet**, **USB**, **RS-232**, optional **RS-232 Multidrop**, and optional **RS-485**. In addition to using the appropriate cables, each type of communication method must be configured using the SETUP>COMM menu, Section 5.7. Although Ethernet is DHCP-enabled by default, it can also be configured manually to set up a static IP address, which is the recommended setting when operating the instrument via Ethernet.

ETHERNET CONNECTION

For network or Internet communication with the analyzer, connect an Ethernet cable from the analyzer's rear panel Ethernet interface connector to an Ethernet port. Please refer to Section 6.5 for a description of the default configuration and setup instructions.

Configuration:

- manual configuration: Section 6.5.1.
- automatic configuration (default): Section 6.5.2.

USB CONNECTION

For direct communication between the analyzer and a PC, connect a USB cable between the analyzer and desktop or laptop USB ports. The baud rate for the analyzer and the computer must match; you may elect to change one or the other: to view and/or change the analyzer's baud rate, see Section 6.2.2.

Note

If this option is installed, the COM2 port cannot be used for anything other than Multidrop communication.

Configuration: Section 6.6

RS-232 CONNECTION

For **RS-232** communications with data terminal equipment (**DTE**) or with data communication equipment (**DCE**) connect either a DB9-female-to-DB9-female cable (Teledyne API part number WR000077) or a DB9-female-to-DB25-male cable (Option 60A, Section 1.3), as applicable, from the analyzer's rear panel RS-232 port to the device. Adjust the DCE-DTE switch (Section 6.2) to select DTE or DCE as appropriate.

Configuration: Sections 5.7 and 6.3.

IMPORTANT

IMPACT ON READINGS OR DATA

Cables that appear to be compatible because of matching connectors may incorporate internal wiring that makes the link inoperable. Check cables acquired from sources other than Teledyne API for pin assignments (Figure 3-12) before using.

RS-232 COM PORT CONNECTOR PIN-OUTS

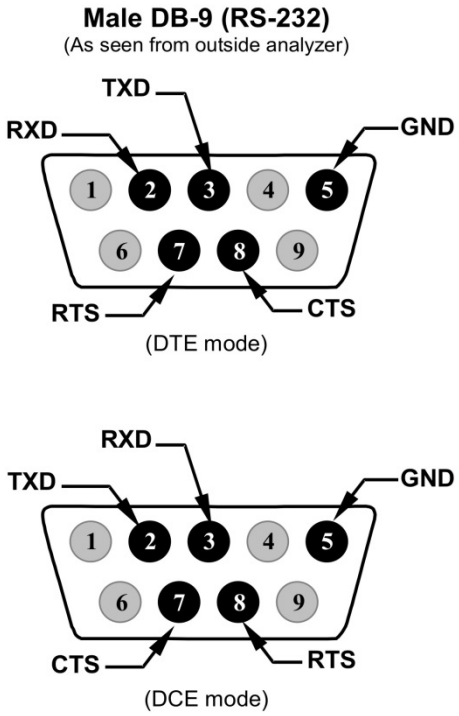

Figure 3-12: Rear Panel Connector Pin-Outs for RS-232 Mode

The signals from these two connectors are routed from the motherboard via a wiring harness to two 10-pin connectors on the CPU card, J11 and J12 (Figure 3-13).

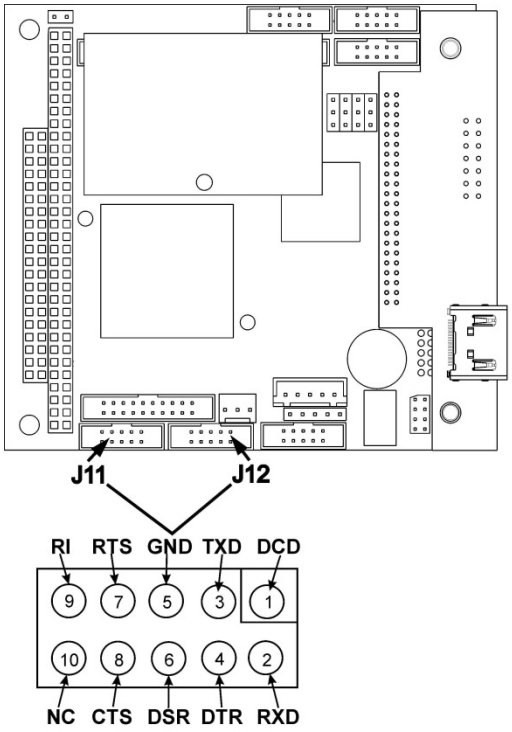

Figure 3-13: CPU Connector Pin-Outs for RS-232 Mode

RS-232 COM PORT DEFAULT SETTINGS

As received from the factory, the analyzer is set up to emulate a DCE (Section 6.1) or modem, with Pin 3 of the DB-9 connector designated for receiving data and Pin 2 designated for sending data.

RS-232: RS-232 (fixed) DB-9 male connector

- Baud rate: 115200 bits per second (baud)
- Data Bits: 8 data bits with 1 stop bit
- Parity: None

COM2: RS-232 (configurable to RS 485), DB-9 female connector.

- Baud rate:19200 bits per second (baud).
- Data Bits: 8 data bits with 1 stop bit.
- Parity: None.

Configuration: Section 6.2.2

RS-232 MULTIDROP (OPTION 62) CONNECTION

Note

Because the RS-232 Multidrop option uses both the RS232 and COM2 DB9 connectors on the analyzer's rear panel to connect the chain of instruments, COM2 port is no longer available for separate RS-232 or RS-485 operation.

ATTENTION

COULD DAMAGE INSTRUMENT AND VOID WARRANTY

Printed Circuit Assemblies (PCAs) are sensitive to electro-static discharges too small to be felt by the human nervous system. Failure to use ESD protection when working with electronic assemblies will void the instrument warranty. Refer to the Primer on Electro-static Discharge manual, downloadable from our website at http://www.teledyne-api.com under Help Center > Product Manuals in the Special Manuals section, for more information on preventing ESD damage.

When the RS-232 Multidrop option is installed, connection adjustments and configuration through the menu system are required. This section provides instructions for the internal connection adjustments, then for external connections, and ends with instructions for menu-driven configuration.

In each instrument with the Multidrop option there is a shunt jumpering two pins on the serial Multidrop and LVDS printed circuit assembly (PCA), as shown in Figure 3-14. This shunt must be removed from all instruments except that designated as last in the multidrop chain, which must remain terminated. This requires powering off and opening each instrument and making the following adjustments:

1. With **NO power** to the instrument, remove the top cover and lay the rear panel open for access to the Multidrop/LVDS PCA, which is seated on the CPU.
2. On the Multidrop/LVDS PCA's JP2 connector, remove the shunt that jumpers Pins 21 ↔ 22 as indicated in Figure 3-14. (Do this for all but the last instrument in the chaim where the shunt should remain installed at Pins 21 ↔ 22).
3. Check that the following cable connections are made in *all* instruments (refer to Figure 3-14):
   - J3 on the Multidrop/LVDS PCA to the CPU's COM1 connector (Note that the CPU's COM2 connector is not used in Multidrop).
   - J4 on the Multidrop/LVDS PCA to J12 on the motherboard
   - J1 on the Multidrop/LVDS PCA to the front panel LCD

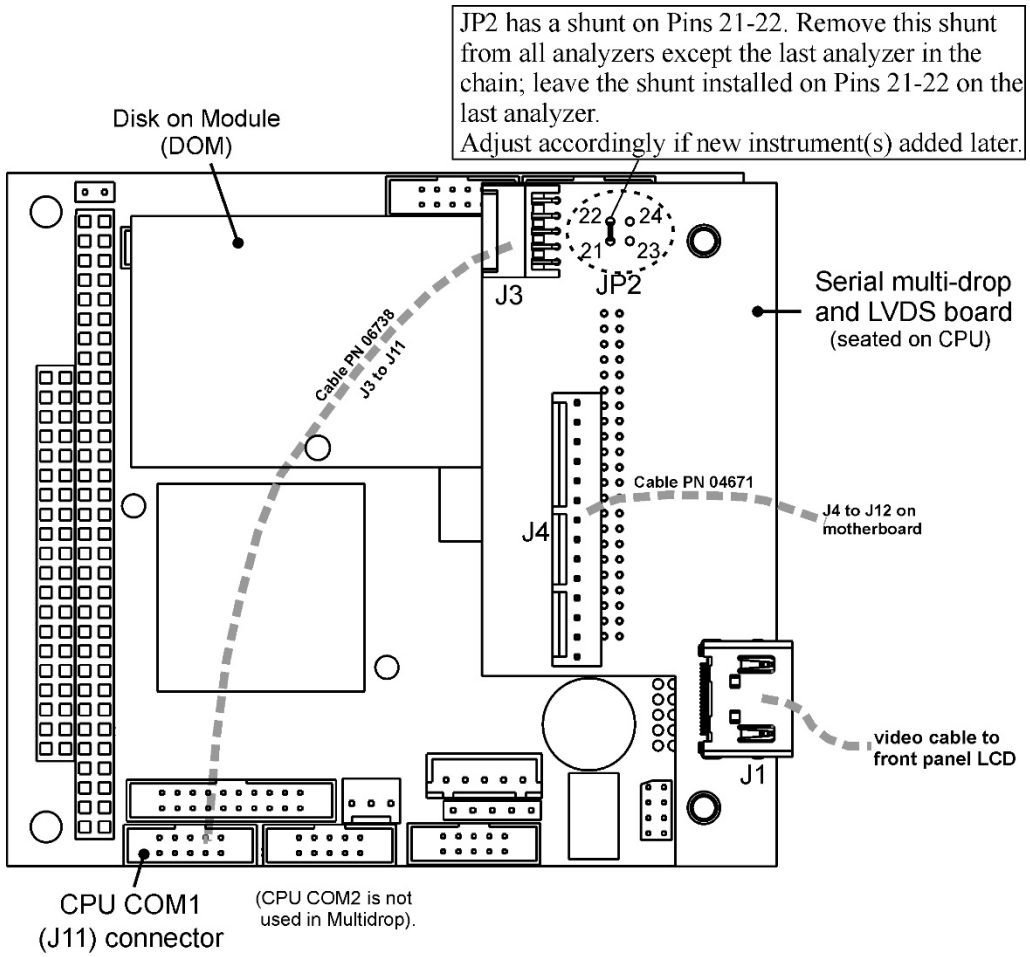

Figure 3-14: Jumper and Cables for Multidrop Configuration

Note

If you are adding an instrument to the end of a previously configured chain, remove the shunt between Pins 21 ↔ 22 of JP2 on the Multidrop/LVDS PCA in the instrument that was previously the last instrument in the chain.

4. Close the instrument.
5. Referring to Figure 3-15, use straight-through DB9 male → DB9 female cables to interconnect the host RS232 port to the first analyzer's RS232 port. Then from the first analyzer's COM2 port connect to the second analyzer's RS232 port, and from the second analyzer's COM2 port connect to the third analyzer's RS232 port, etc., connecting in this fashion up to eight analyzers, subject to the distance limitations of the RS-232 standard.
6. On the rear panel of each analyzer, adjust the DCE DTE switch so that the green and the red LEDs (RX and TX) of the COM1 connector (labeled RS232) are both lit. (Ensure you are using the correct RS-232 cables internally wired specifically for RS-232 communication; see Table 1-1: Analyzer Options, "Communication Cables" and Section 3.3.1.8: Connecting the Communications Interfaces, "RS-232 Connection").

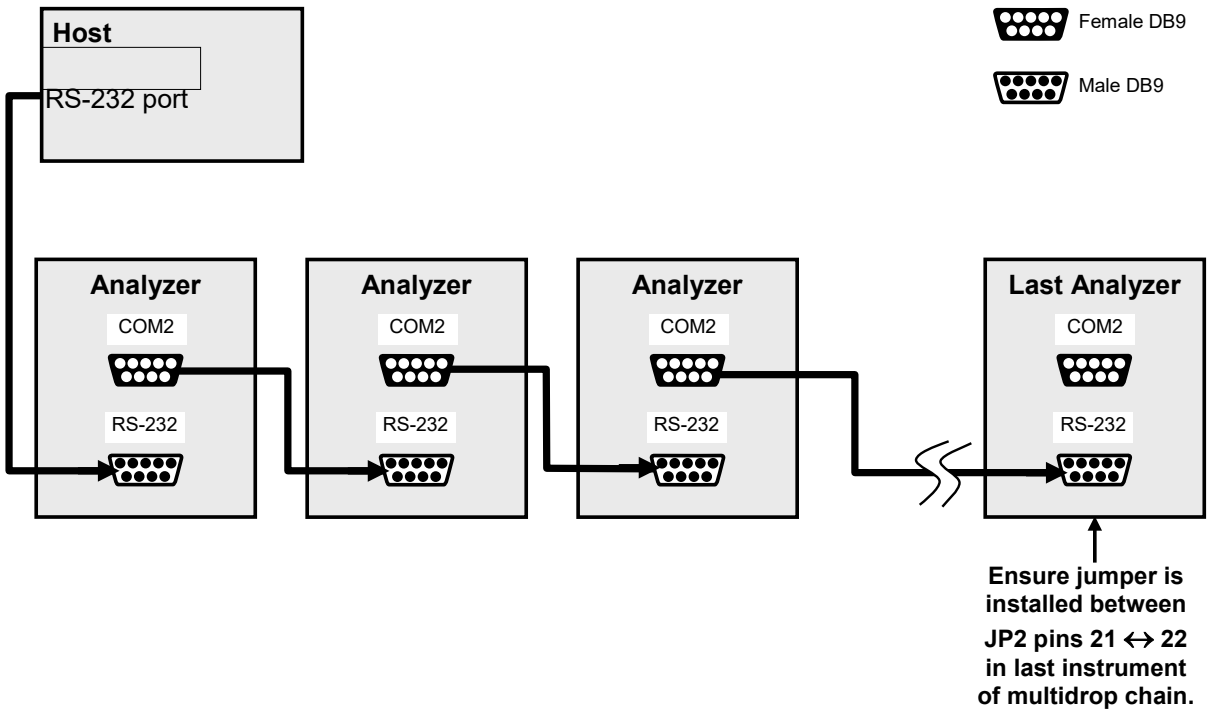

Figure 3-15: RS-232-Multidrop PCA Host/Analyzer Interconnect Diagram

7. BEFORE communicating from the host, power on the instruments and check that the Machine ID (Section 5.7.1) is unique for each. On the front panel menu, use SETUP>MORE>COMM>ID. The default ID is typically either the model number or "0"; to change the 4-digit identification number, press the button below the digit to be changed, and press/select ENTER to accept the new ID for that instrument).

Note

Teledyne API recommends setting up the first link, between the Host and the first analyzer, and testing it before setting up the rest of the chain.

8. Next, in the SETUP>MORE>COMM>COM1 menu (do not use the COM2 menu), edit the COM1 MODE parameter as follows: press/select EDIT and set only QUIET MODE, COMPUTER MODE, and MULTIDROP MODE to ON. Do not change any other settings.
9. Press/select ENTER to accept the changed settings, and ensure that COM1 MODE now shows 35.
10. Press/select SET> to go to the COM1 BAUD RATE menu and ensure it reads the same for all instruments (edit as needed so that all instruments are set at the same baud rate; refer to Section 6.2.2).

Note

- **The Instrument ID's should not be duplicated.**
- **The (communication) Host instrument can only address one instrument at a time.**
- **COM1 port must be set at the same baud rate in all instruments in the multidrop chain.**

RS-485 CONNECTION

As delivered from the factory, COM2 is configured for RS-232 communications. This port can be reconfigured for operation as a non-isolated, half-duplex RS-485 port. Using COM2 for RS-485 communication disables the USB port. To reconfigure this port for RS-485 communication, please contact the factory.

3.3.2. PNENUMATIC CONNECTIONS

This section provides not only pneumatic connection information, but also important information about the gases required for accurate calibration (Section 3.3.2.1); it also illustrates the pneumatic layouts for the analyzer in its basic configuration and with options.

Before making the pneumatic connections, carefully note the following cautionary and special messages:

CAUTION! GENERAL SAFETY HAZARD

OZONE (O_3) IS A TOXIC GAS.

Obtain a Material Safety Data Sheet (MSDS) for this material. Read and rigorously follow the safety guidelines described there.

Do not vent calibration gas and sample gas into enclosed areas

Sample and calibration gases should only come into contact with PTFE, FEP or glass.

CAUTION!

Do not operate this instrument until removing dust plugs from SAMPLE and EXHAUST ports on the rear panel!

CAUTION! GENERAL SAFETY HAZARD

Venting should be outside the shelter or immediate area surrounding the instrument and conform to all safety requirements regarding exposure to O_3.

3.3.2.1. About Zero Air and Calibration Gas

Zero air and span gas are required for accurate calibration.

ZERO AIR

Zero air is similar in chemical composition to the Earth's atmosphere but scrubbed of all components that might affect the analyzer's readings. If your analyzer is equipped with an Internal Zero Span (IZS) or an external zero air scrubber option, it is capable of creating zero air. For analyzers without an IZS or external zero air scrubber option, an external zero air generator such as the Teledyne API Model 701 can be used.

CALIBRATION (SPAN) GAS

Calibration gas is a gas specifically mixed to match the chemical composition of the type of gas being measured at near full scale of the desired reporting range. Because ozone (O_3) quickly breaks down into molecular oxygen (O_2), this calibration gas cannot be supplied in precisely calibrated bottles like other gases.

- If the T400 analyzer is not equipped with the optional internal zero air generator (IZS), an external O_3 generator capable of supplying accurate O_3 calibration mixtures must be used.
- Also, some applications, such as EPA monitoring, require multipoint calibration checks where Span gas of several different concentrations is needed.
- In either case, we recommend using a Gas Dilution Calibrator such as a TAPI Model T700 with internal photometer option.

In the case of O_3 measurements made with the Model T400 photometric ozone analyzer, it is recommended that you use a span gas with an O_3 concentration equal to 90% of the reporting range for your application.

EXAMPLE:

- If the application is to measure between 0 ppm and 500 ppb, an appropriate span gas would be 450 ppb.
- If the application is to measure between 0 ppb and 1000 ppb, an appropriate span gas would be 800 ppb.

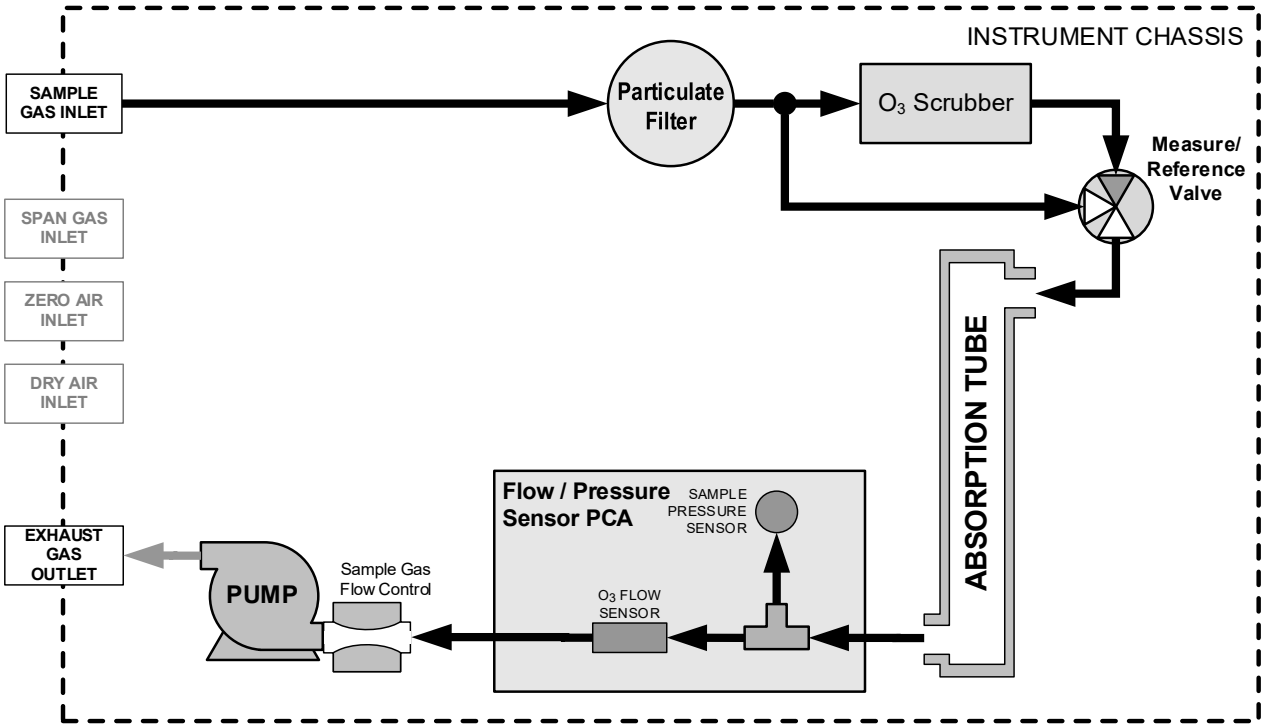

Figure 3-16: T400 Pneumatic Diagram – Basic Unit

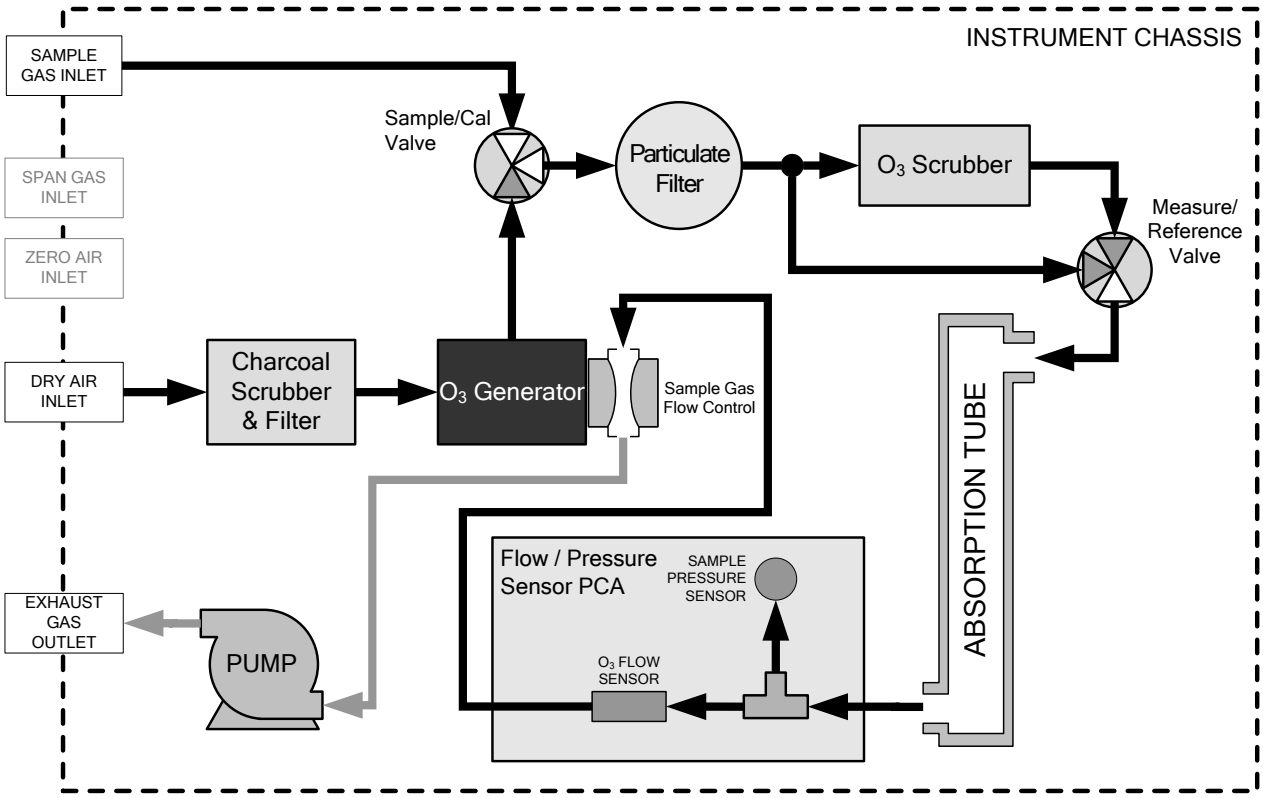

Figure 3-17: T400 Pneumatic Diagram with Internal Zero/Span (IZS) Option (OPT-50G)

3.3.2.2. **Pneumatic Setup for Basic Configuration**

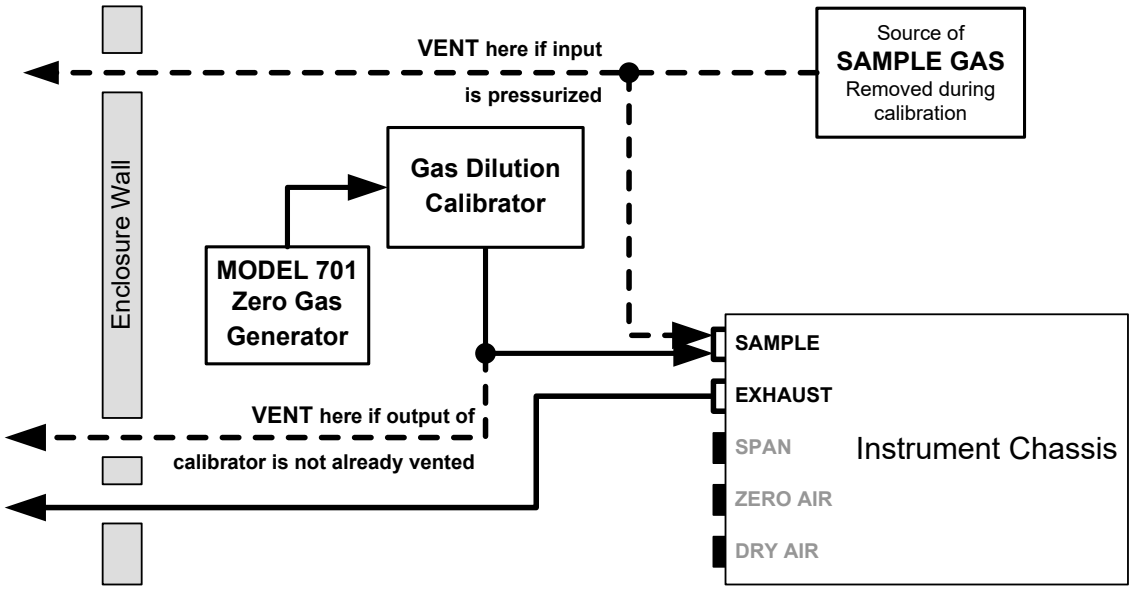

Figure 3-18: Gas Line Connections for the T400 Analyzer – Basic Configuration

For the Model T400 photometric ozone analyzer in its basic configuration (i.e. without the optional internal zero air source or valves), attach the following pneumatic lines:

SAMPLE GAS SOURCE:

Attach a sample inlet line to the sample inlet fitting.

- Sample Gas pressure must equal ambient atmospheric pressure (1.0 psig)
- In applications where the sample gas is received from a pressurized manifold, a vent must be placed on the sample gas line. This vent line must be:
  - At least 0.2m long
  - No more than 2m long
  - Vented outside the shelter or immediate area surrounding the instrument

CAL GAS & ZERO AIR SOURCES:

The source of calibration gas is also attached to the **SAMPLE** inlet, but only when a calibration operation is actually being performed.

EXHAUST OUTLET:

Attach an exhaust line to the **EXHAUST** outlet fitting.

- The exhaust line should be a maximum of 10 meters of ¼" PTEF tubing.

Once the appropriate pneumatic connections have been made, check all pneumatic fittings for leaks using the procedures defined in Section 10.3.4.

3.3.2.3. **Pneumatic Setup for the T400 Analyzer with Internal Zero/Span Option (IZS)**

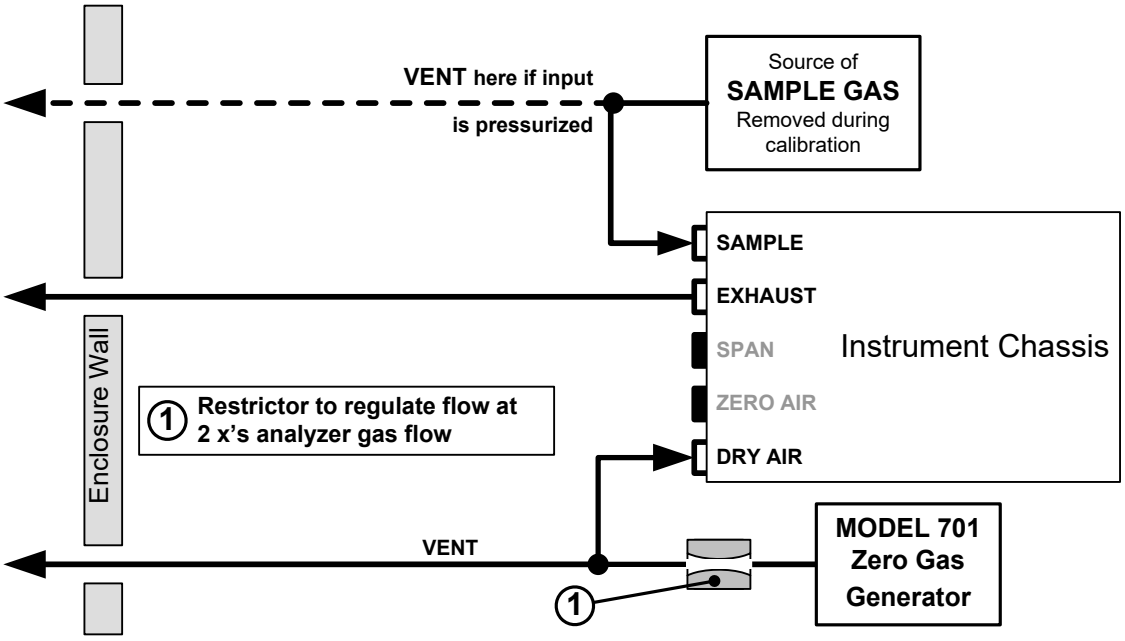

Figure 3-19: Gas Line Connections for the T400 Analyzer with IZS Option (OPT-50G)

For the Model T400 photometric ozone analyzer with the optional internal zero air generator and span valve (IZS), attach the following pneumatic lines:

SAMPLE GAS SOURCE:

Attach a sample inlet line to the sample inlet fitting.

- Sample Gas pressure must equal ambient atmospheric pressure (1.0 psig)
- In applications where the sample gas is received from a pressurized manifold, a vent must be placed on the sample gas line. This vent line must be:
  - At least 0.2m long
  - No more than 2m long
  - Vented outside the shelter or immediate area surrounding the instrument

ZERO AIR SOURCE:

Attach a gas line from the source of zero air (e.g., a Teledyne API M701 zero air Generator) to the **DRY AIR** inlet.

- The gas from this line will be used internally as zero air and as source air for the internal O_3 generator

EXHAUST OUTLET:

Attach an exhaust line to the **EXHAUST** outlet fitting.

The exhaust line should be a maximum of 10 meters of ¼" PTEF tubing.

Once the appropriate pneumatic connections have been made, check all pneumatic fittings for leaks using the procedures defined in Section 10.3.4.

3.3.3. PNEUMATIC SETUPS FOR AMBIENT AIR MONITORING

3.3.3.1. Pneumatic Set Up for T400's Located in the Same Room Being Monitored

In this application it is often preferred that the sample gas and the source gas for the O_3 generator and internal zero air be the same chemical composition.

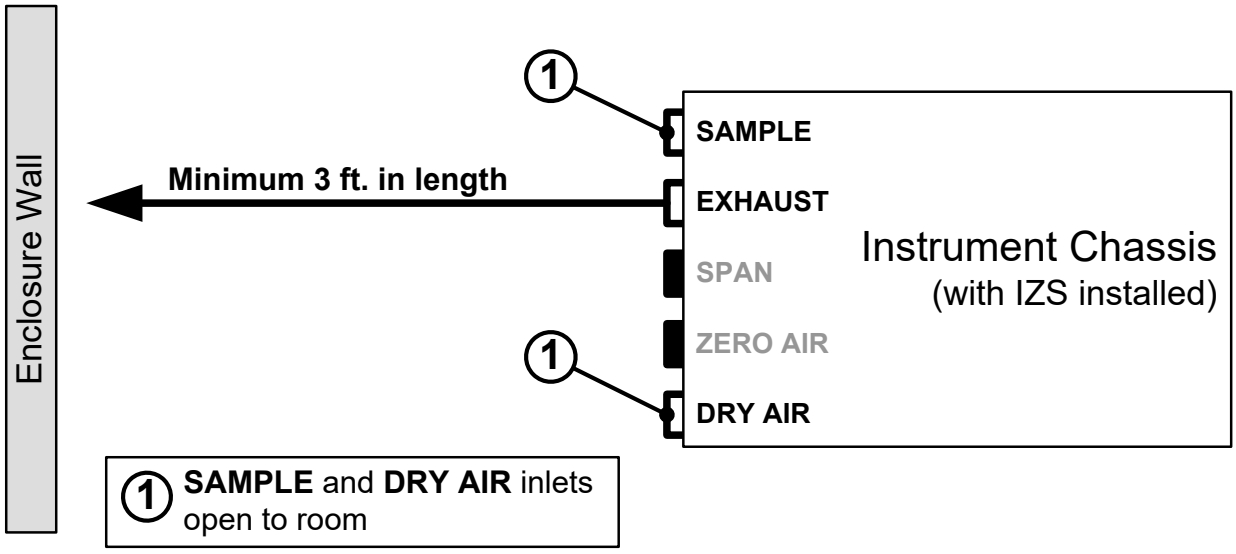

Figure 3-20: Gas Line Connections when the T400 Analyzer is Located in the Room Being Monitored

SAMPLE GAS & DRY AIR SOURCES

For instruments located in the same room being monitored, there is no need to attach the gas inlet lines to the **SAMPLE** inlet or the **DRY AIR** inlet.

EXHAUST OUTLET

Attach an outlet line to the **EXHAUST** outlet fitting.

- In order to prevent the instrument from re-breathing its own exhaust gas (resulting in artificially low readings) the end of the exhaust outlet line should be located at least 2 feet from the back panel of the instrument.

Once the appropriate pneumatic connections have been made, check all pneumatic fittings for leaks using the procedures defined in Section 10.3.4.

3.3.3.2. **Pneumatic Set Up for T400's Monitoring Remote Locations**

In this application it is often preferred that the Sample gas and the source gas for the O_3 generator and internal zero air be the same chemical composition.

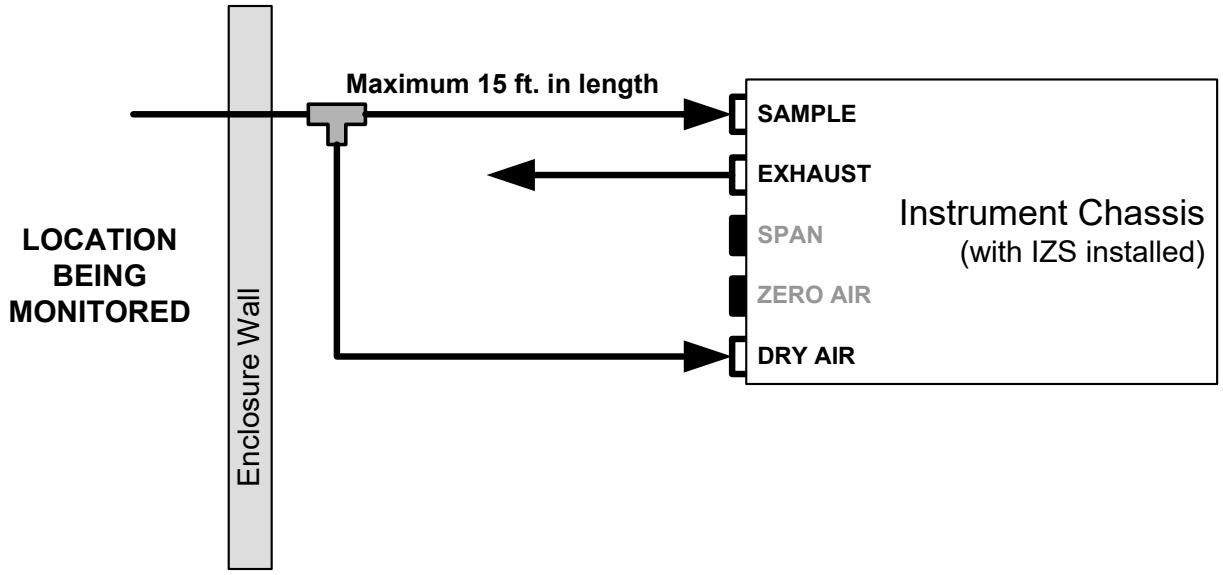

Figure 3-21: Gas Line Connections when the T400 Analyzer is Monitoring a Remote Location

SAMPLE GAS SOURCE:

Attach a sample inlet line leading from the room being monitored to the **SAMPLE** inlet fitting.

DRY AIR SOURCE:

Attach a gas line leading from the room being monitored to the **DRY AIR** inlet port.

- This can be a separate line or, as shown above the same line with a T- fitting.

EXHAUST OUTLET:

No outlet line is required for the exhaust port of the instrument.

Once the appropriate pneumatic connections have been made, check all pneumatic fittings for leaks using the procedures defined in Section 10.3.4.

3.4. STARTUP, FUNCTIONAL CHECKS, AND INITIAL CALIBRATION

If you are unfamiliar with the T400 theory of operation, we recommend that you read Section 12.

For information on navigating the analyzer's software menus, see the menu trees described in Appendix A.

3.4.1. START UP

After the electrical and pneumatic connections are made, an initial functional check is in order. Turn on the instrument. The pump and exhaust fan should start immediately. The display will show a momentary splash screen of the Teledyne API logo and other information during the initialization process while the CPU loads the operating system, the firmware and the configuration data.

The analyzer should automatically switch to Sample Mode after completing the boot-up sequence and start monitoring O_3 gas. However, there is an approximately one-hour warm-up period before reliable gas measurements can be taken. During the warm-up period, the front panel display may show messages in the Parameters field.

3.4.2. WARNING MESSAGES

Because internal temperatures and other conditions may be outside be specified limits during the analyzer's warm-up period, the software will suppress most warning conditions for 30 minutes after power up. If warning messages persist after the 30 minutes warm up period is over, investigate their cause using the troubleshooting guidelines in Section 11 of this manual.

To view and clear warning messages, press:

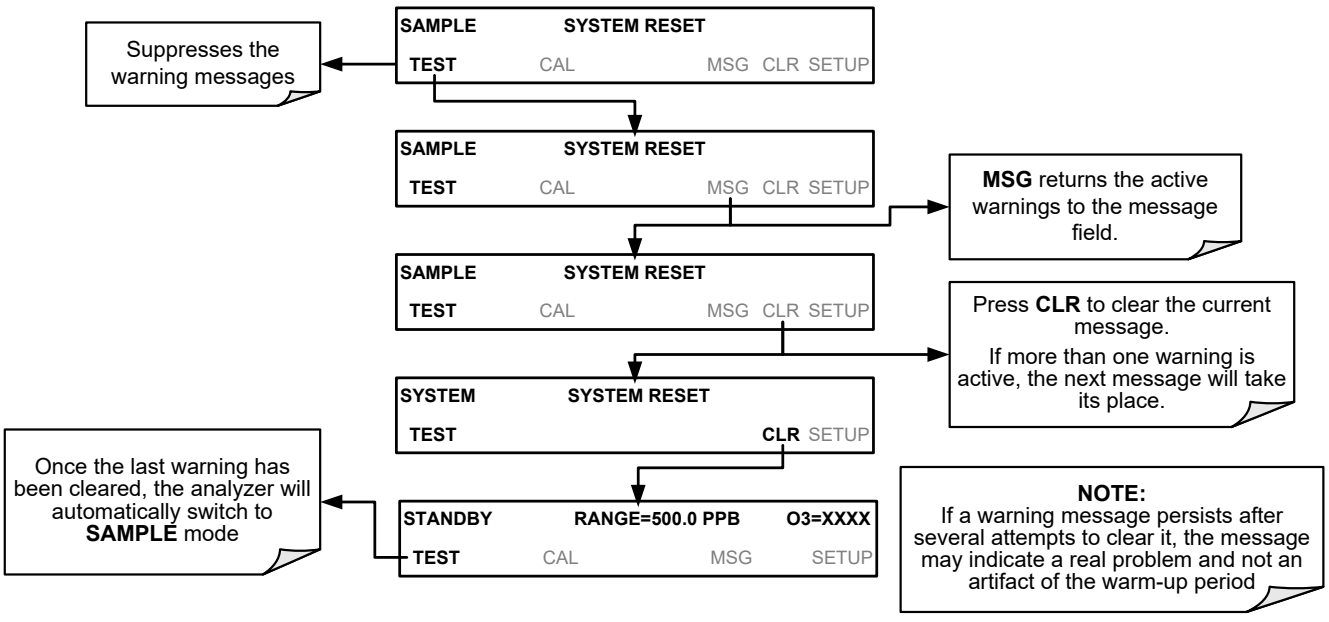

Table 3-8 lists brief descriptions of the warning messages that may occur during start up.

Table 3-8: Possible Warning Messages at Start-Up

MESSAGE	MEANING
ANALOG CAL WARNING	The A/D or at least one D/A channel have not been calibrated.
BOX TEMP WARNING	The temperature inside the T400 chassis is outside the specified limits.
CANNOT DYN SPAN[1]	Contact closure span calibration failed while *DYN_SPAN* was set to *ON*.
CANNOT DYN ZERO[2]	Contact closure zero calibration failed while *DYN_ZERO* was set to *ON*.
CONFIG INITIALIZED	Configuration storage was reset to factory configuration or erased.
DATA INITIALIZED	DAS data storage was erased before the last power up occurred.
LAMP DRIVER WARN	CPU is unable to communicate with one of the I^2C UV Lamp Drivers.
LAMP STABIL WARN	Photometer lamp reference step-changes occur more than 25% of the time.
O_3 GEN LAMP WARN[3]	The UV Lamp or Detector in the IZS module may be faulty or out of adjustment.
O_3 GEN TEMP WARN[3]	The UV Lamp Heater or Temperature Sensor in the IZS module may be faulty.
O_3 GEN REF WARNING[3]	The UV Lamp or Detector in the IZS module may be faulty or out of adjustment.
O_3 SCRUB TEMP WARN[4]	The Heater or Temperature Sensor of the O_3 Scrubber may be faulty.
PHOTO REF WARNING	The O_3 Reference value is outside of specified limits.
PHOTO TEMP WARNING	The UV Lamp Temperature is outside of specified limits.
REAR BOARD NOT DET	Motherboard was not detected during power up.
RELAY BOARD WARN	CPU is unable to communicate with the relay PCA.
SAMPLE FLOW WARN	The flow rate of the sample gas is outside the specified limits.
SAMPLE PRESS WARN	The pressure of the sample gas is outside the specified limits.
SAMPLE TEMP WARN	The temperature of the sample gas is outside the specified limits.
SYSTEM RESET[1]	The computer has rebooted.

[1] Clears the next time successful zero calibration is performed.
[2] Clears the next time successful span calibration is performed.
[3] Only Appears if the IZS option is installed.
[4] Only appears if the optional metal wool O_3 scrubber is installed.

3.4.3. FUNCTIONAL CHECK

After the analyzer's components have warmed up for at least 30 minutes, verify that the software properly supports any hardware options that are installed: navigate through the analyzer's software menus; refer to the menu trees described in Appendix A.

Check to make sure that the analyzer is functioning within allowable operating parameters.

- Appendix C includes a list of test functions viewable from the analyzer's front panel as well as their expected values.
- These functions are also useful tools for diagnosing problems with your analyzer (Section 11.1.2).
- The enclosed Final Test and Validation Data sheet (part number 04314) lists these values as they were before the instrument left the factory.

Press the <TST TST> buttons to scroll through the list of Test parameters. Remember that until the unit has completed its warm up, these parameters may not have stabilized.

3.4.4. INITIAL CALIBRATION

To perform the initial calibration you must have sources for zero air and calibration (span) gas available for input into the inlet/outlet fittings on the back of the analyzer (see Section 3.3.2).

The method for performing an initial calibration for the Model T400 photometric ozone analyzer differs slightly depending on the whether or not any of the available internal zero air or valve options are installed.

- See Section 3.4.5 for instructions for initial calibration of the T400 analyzers in their base configuration.
- See Section 3.5.3 for instructions for initial calibration of T400 analyzers with IZS Valve Options
- See Sections 9.3 and 9.4 for information regarding setup and manual or automatic calibration of T400 analyzers with Z/S Valve options.

3.4.4.1. Interferents for O_3 Measurement

The detection of O_3 is subject to interference from a number of sources including SO_2, NO_2, NO, H_2O and aromatic hydrocarbon meta-xylene and mercury vapor. The Model T400 successfully rejects interference from all of these with the exception of mercury vapor.

If the Model T400 is installed in an environment where the presence of mercury vapor is suspected, steps should be taken to remove the mercury vapor from the sample gas before it enters the analyzer.

For more detailed information regarding O_3 measurement interferences, see Section 12.1.4.

Note **The presence of mercury vapor is highly unlikely in the types of applications for which T400 analyzers with IZS options installed are normally used.**

3.4.5. INITIAL CALIBRATION PROCEDURE FOR T400 ANALYZERS WITHOUT OPTIONS

The following procedure assumes that:

- The instrument DOES NOT have any of the available Zero/Span Valve Options installed and Cal gas will be supplied through the SAMPLE gas inlet on the back of the analyzer.
- The pneumatic setup matches that described in Section 3.3.2.2.

3.4.5.1. Verifying the T400 Reporting Range Settings

While it is possible to perform the following procedure with any range setting we recommend that you perform this initial checkout using the following reporting range settings:

- Unit of Measure**: PPB**
- Reporting Range: **500 PPB**
- Mode Setting: **SNGL**

While these are the default settings for the T400 analyzer, it is recommended that you verify them before proceeding with the calibration procedure, by pressing:

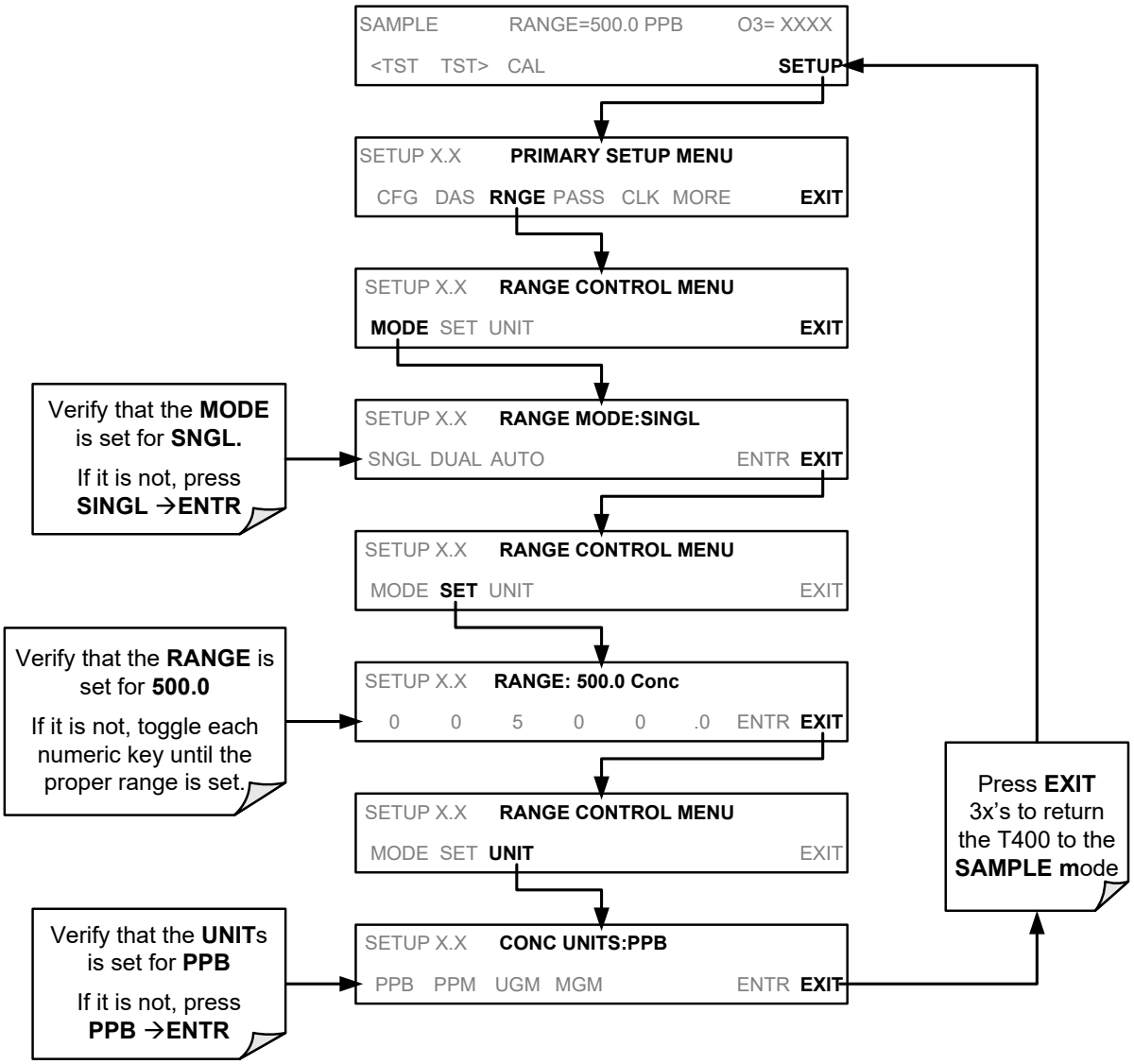

3.4.5.2. **Verifying the Expected O_3 Span Gas Concentration**

Note

For this initial calibration, it is important to verify the <u>precise</u> O_3 concentration value of the SPAN gas independently.

The O_3 span concentration value automatically defaults to **400.0 PPB** and it is recommended that an O_3 calibration gas of that concentration be used for the initial calibration of the unit. To verify that the analyzer span setting is set for **400 PPB**, press:

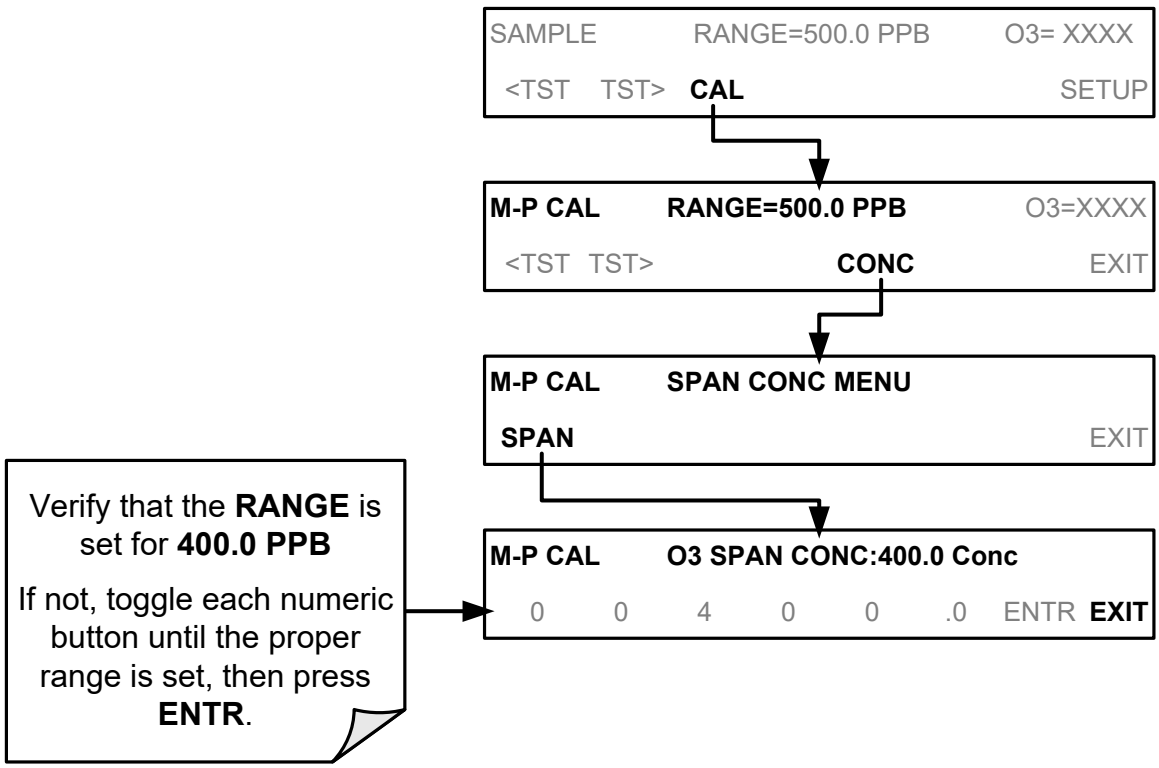
SAMPLE RANGE=500.0 PPB O3= XXXX
<TST TST> CAL SETUP
M-P CAL RANGE=500.0 PPB O3=XXXX
<TST TST> CONC EXIT
M-P CAL SPAN CONC MENU
SPAN EXIT
M-P CAL O3 SPAN CONC:400.0 Conc
0 0 4 0 0 .0 ENTR EXIT
Verify that the RANGE is set for 400.0 PPB
If not, toggle each numeric button until the proper range is set, then press ENTR.

3.4.6. **INITIAL CALIBRATION PROCEDURE:**

To perform an initial calibration of the Model T400 photometric ozone analyzer, press:

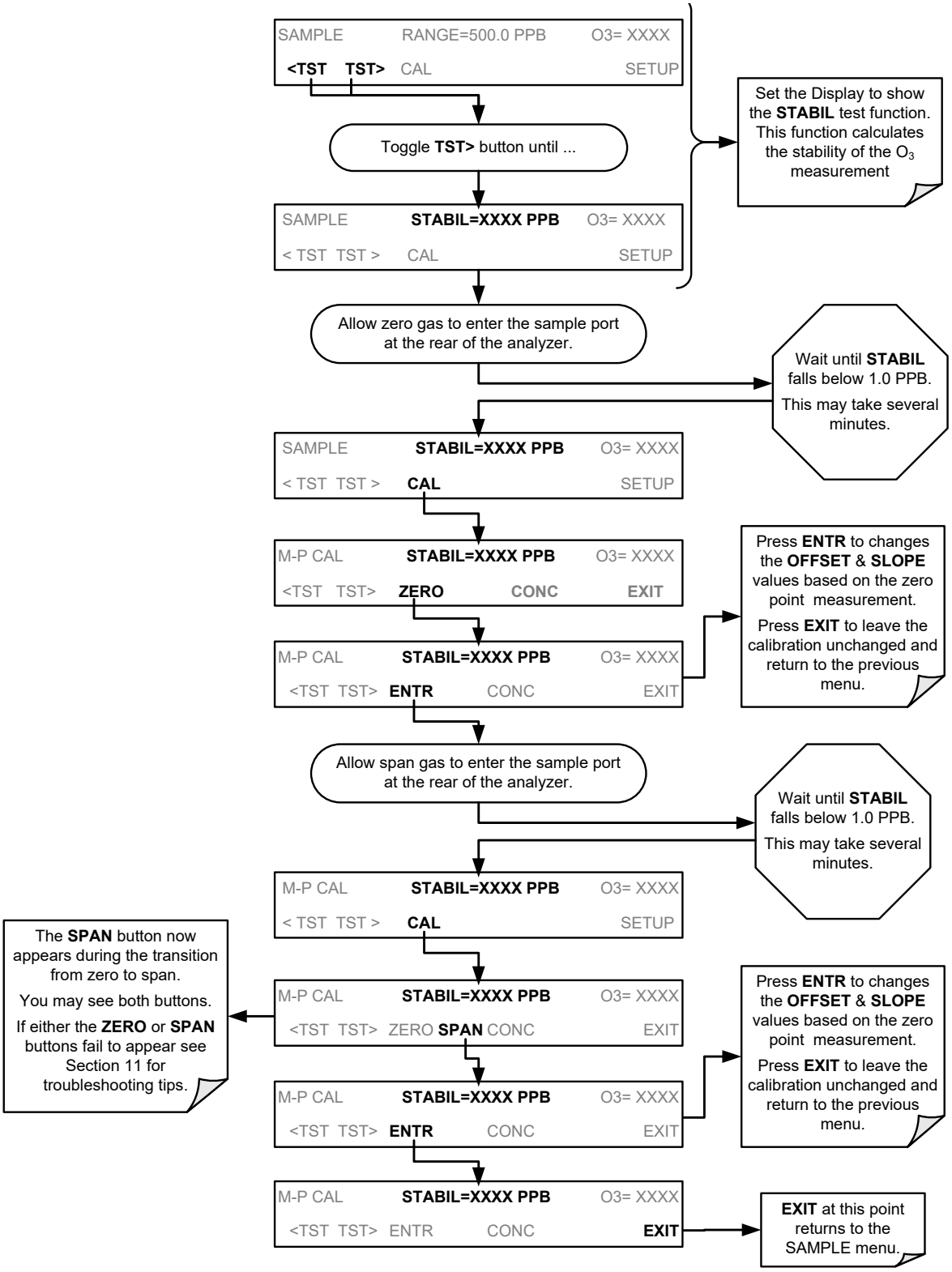

The Model T400 Analyzer is now ready for operation.

3.5. CONFIGURING THE INTERNAL ZERO/SPAN OPTION (IZS)

For a desicription of the span valve options, see Section 3.6.

In order to use the IZS option to perform calibration checks, it is necessary to configure certain performance parameters of the O_3 Generator.

3.5.1. VERIFY THE O_3 GENERATOR AND EXPECTED O_3 SPAN CONCENTRATION SETTINGS

As is true for T400 analyzers without options, when the IZS option is present, the O_3 span concentration value also automatically defaults to **400.0 PPB**. In this case, no external source of calibration gas is required; however, it is necessary to verify that the internal O_3 generator is set to produce an O_3 concentration of 400.0 **PPB**.

To verify/set that these levels, press:

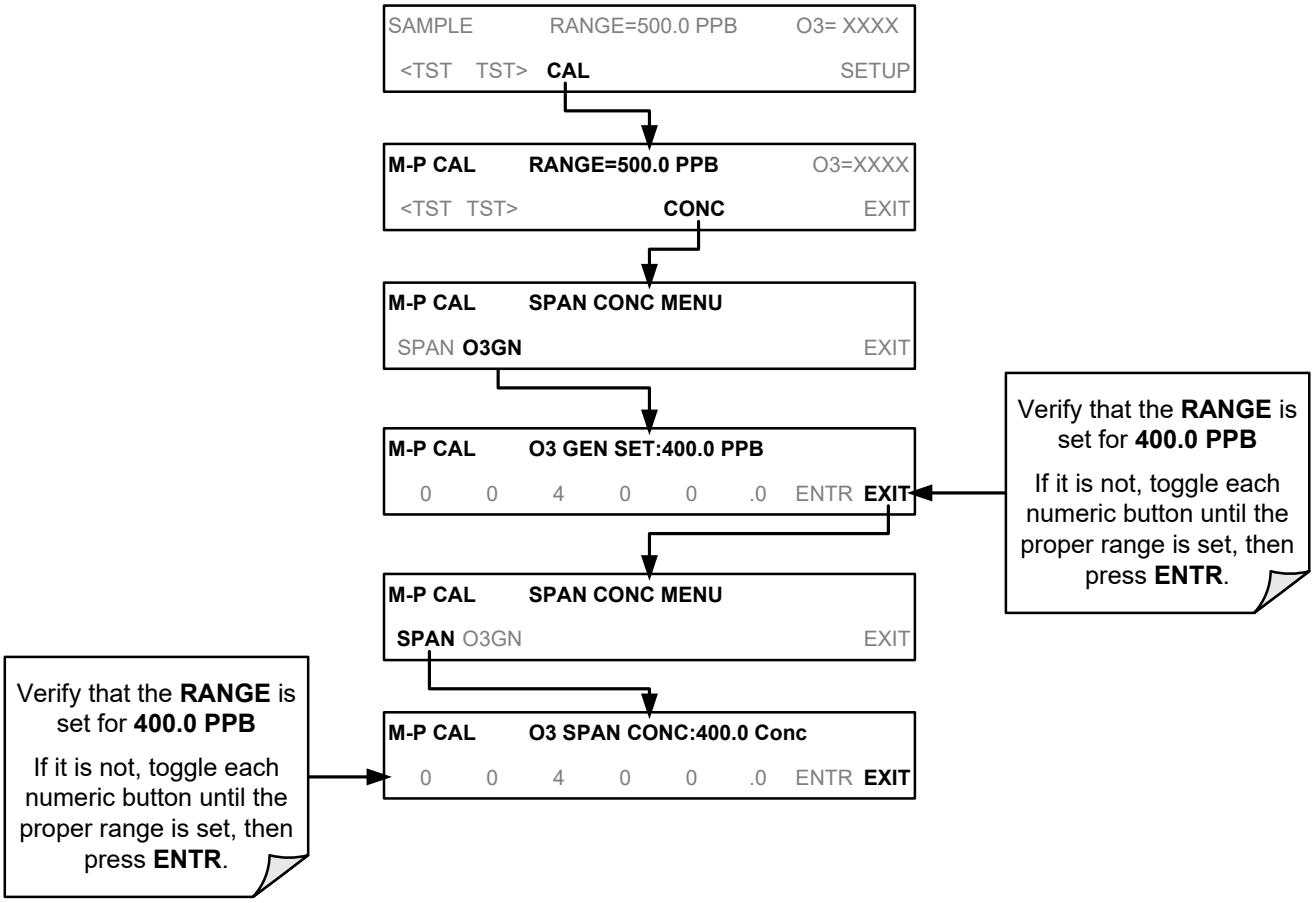

3.5.2. SETTING THE O_3 GENERATOR LOW-SPAN (MID POINT) OUTPUT LEVEL

To set the ozone LO SPAN (Midpoint) concentration for the IZS O_3 generator, press:

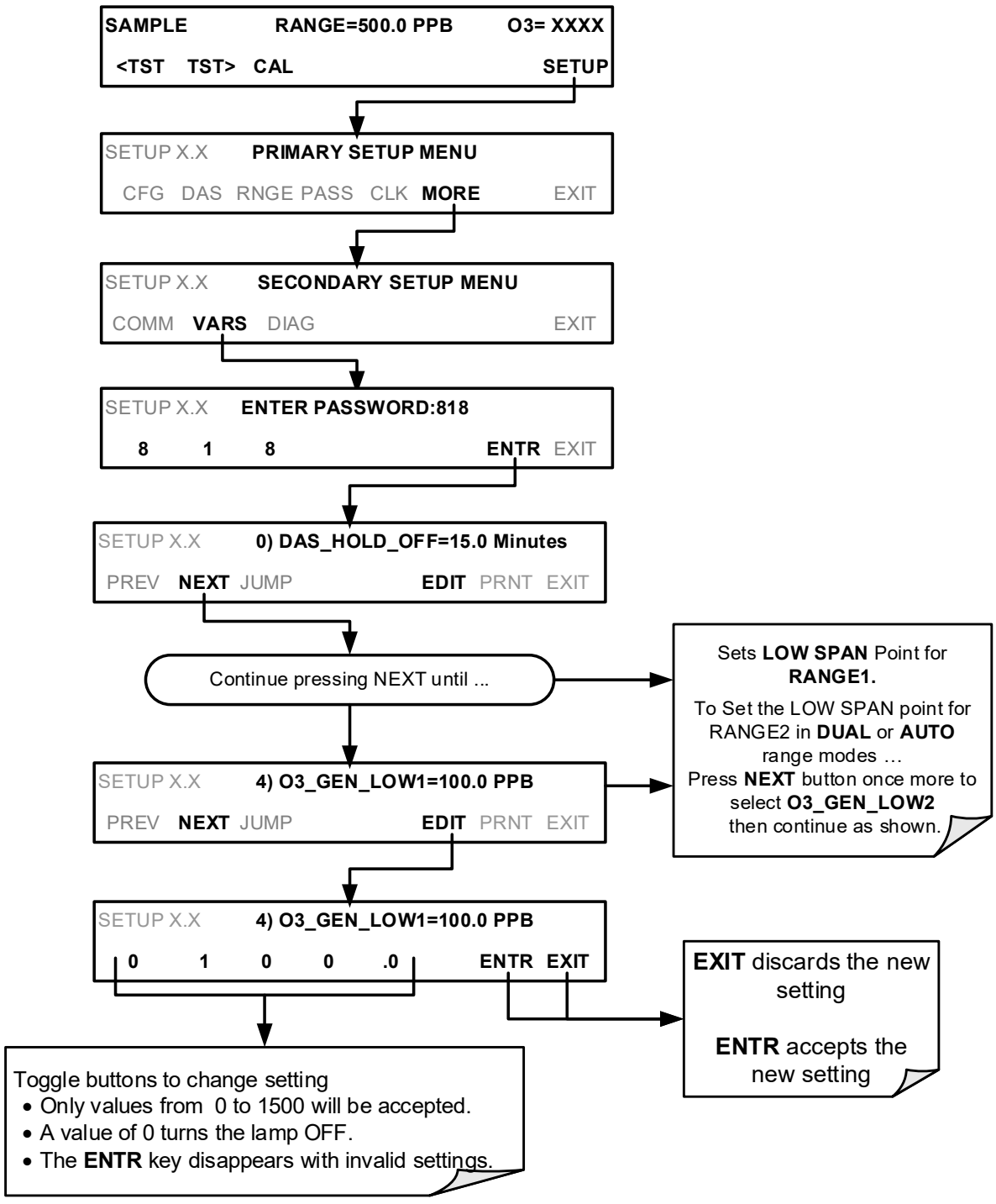

3.5.3. TURNING ON THE REFERENCE DETECTOR OPTION

If the IZS feedback option is purchased, the analyzer must be told to accept data from the Reference Detector and actively adjust the IZS output to maintain the reference set point(s) previously chosen by the user (see Section 3.5.2). To perform this operation:

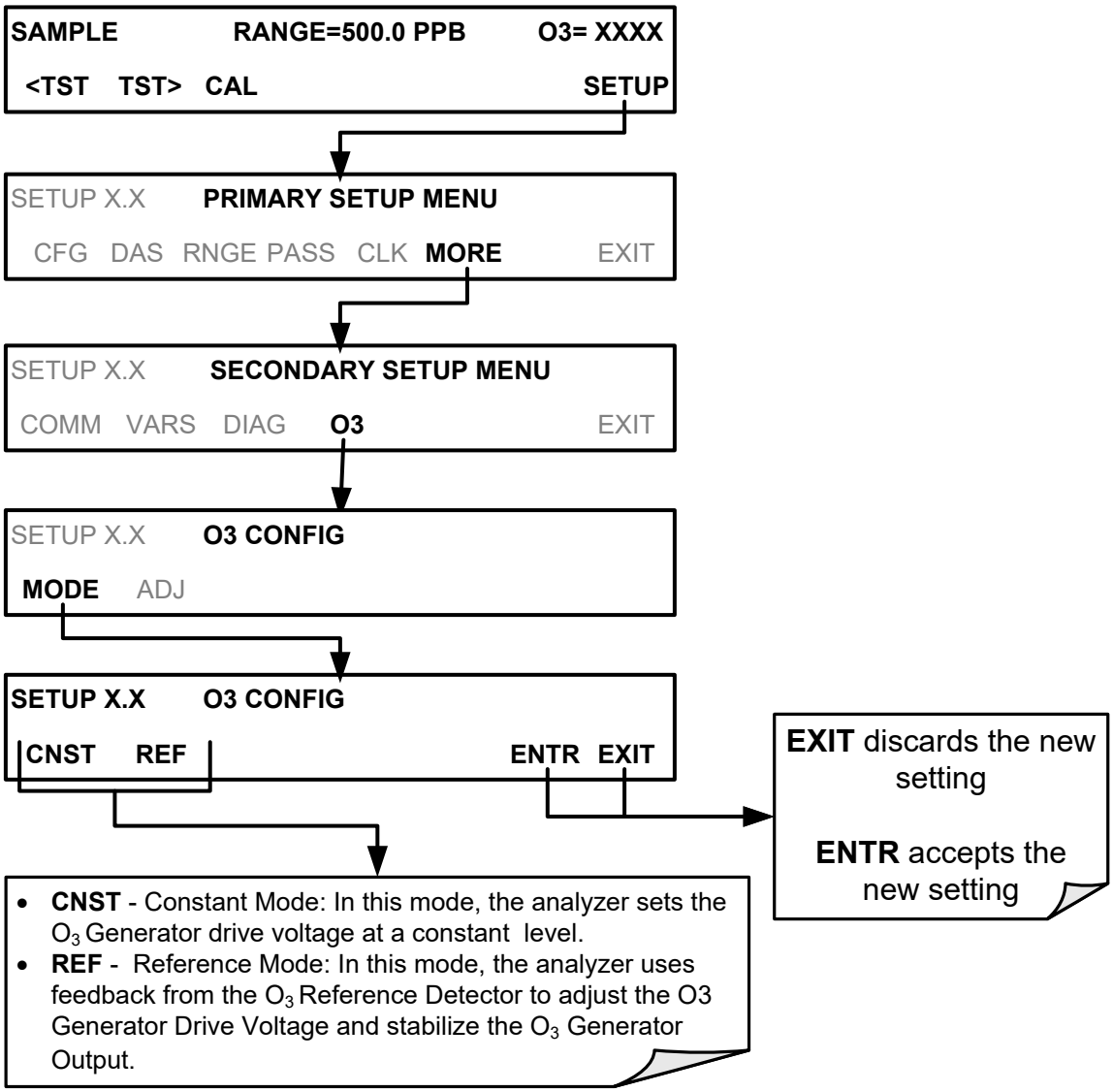

3.5.4. INITIAL CALIBRATION AND CONDITIONING OF T400 ANALYZERS WITH THE IZS OPTION INSTALLED

The following procedure assumes that:

- The instrument has an IZS Option installed.
- The pneumatic setup matches that described in Section 3.3.2.3 or Section 3.3.3.

3.5.4.1. **Initial O_3 Scrubber Conditioning**

The IZS option includes a charcoal O_3 scrubber that creates zero air for the auto zero calibration feature. This charcoal scrubber must be conditioned for the relative humidity of the locale being monitored.

To start this conditioning cycle, press:

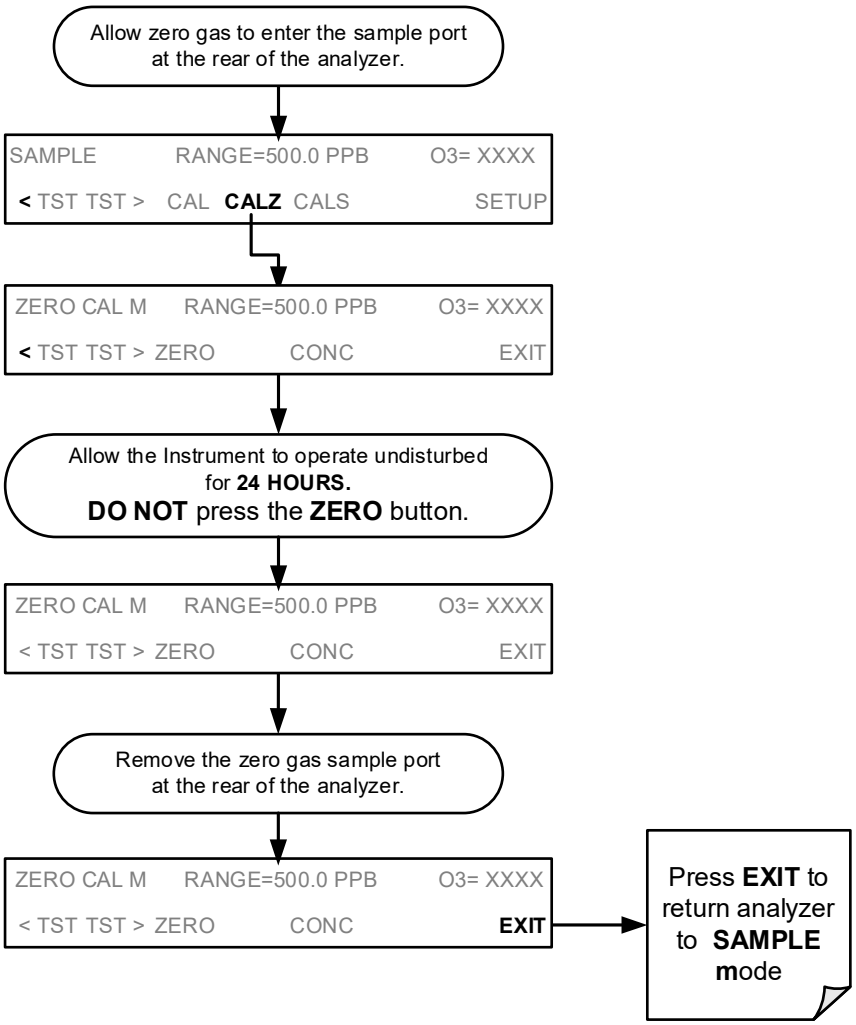

3.5.4.2. Verifying the T400 Reporting Range Settings

While it is possible to perform the following procedure with any range setting, we recommend that you perform this initial checkout using the following reporting range settings:

- Unit of Measure**: PPB**
- Reporting Range: **500 ppb**
- Mode Setting: **SNGL**

These are the default settings for the T400 analyzer; however, it is a good idea to verify them before proceeding with the calibration procedure. Use the same method as described in Section 3.4.5.1.

3.5.4.3. Initial Zero/Span Calibration Procedure

Unlike other versions of the T400, analyzers with the IZS option installed do not require the expected span gas concentration be set during initial start-up because no initial span calibration is performed.

3.6. CALIBRATION VALVE OPTIONS

3.6.1. AMBIENT ZERO/AMBIENT SPAN VALVES (OPT 50A)

The Model T400 photometric ozone analyzer can be equipped with a zero/span valve option for controlling the flow of calibration gases generated from sources external to the instrument. This option consists of a set of two solenoid valves located inside the analyzer that allow the user to switch the active source of gas flowing into the instrument's optical bench between the sample inlet, the span gas inlet and the zero air inlet.

The user can control these valves from the front panel touchscreen either manually or by activating the instrument's **AUTOCAL** feature (See Section 9.4).

The valves may also be opened and closed remotely via the RS-232/485 Serial I/O ports (see Section 8.2) or External Digital I/O Control Inputs (See Section 9.3.3.3)

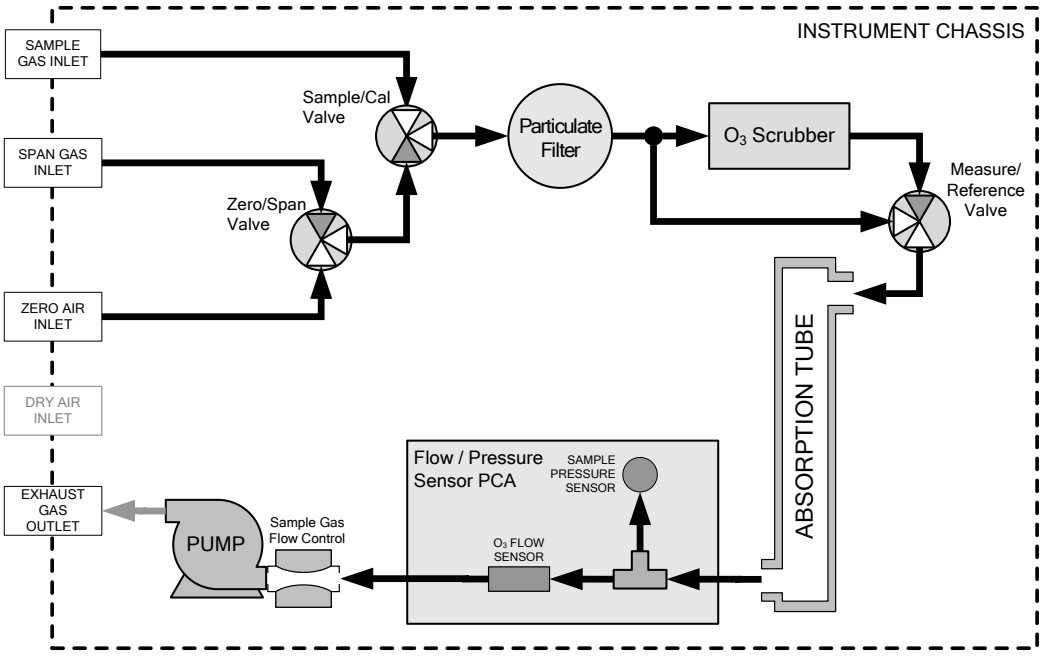

Figure 3-22: T400 Pneumatic Diagram with Zero/Span Valve Option (OPT-50A)

The instrument's zero air and span gas flow rate required for this option is 800 cc/min, however, the US EPA recommends that the cal gas flow rate be at least 1600 cc/min.

Table 3-9: Zero/Span Valve Operating States for Option 50A

Mode	Valve	Condition
SAMPLE	Sample/Cal	Open to SAMPLE inlet
	Zero/Span	Open to ZERO AIR inlet
ZERO CAL	Sample/Cal	Open to ZERO/SPAN valve
	Zero/Span	Open to ZERO AIR inlet
SPAN CAL	Sample/Cal	Open to ZERO/SPAN valve
	Zero/Span	Open to SPAN GAS inlet

The state of the Sample/Cal valves can be controlled:

- Manually via the analyzer's front panel;
- By activating the instrument's AutoCal feature (See Section 9.4);
- Remotely by using the External Digital I/O Control Inputs (See Section 9.3.3.3), or
- Remotely via the RS-232/485 Serial I/O ports (See Section 8.2).

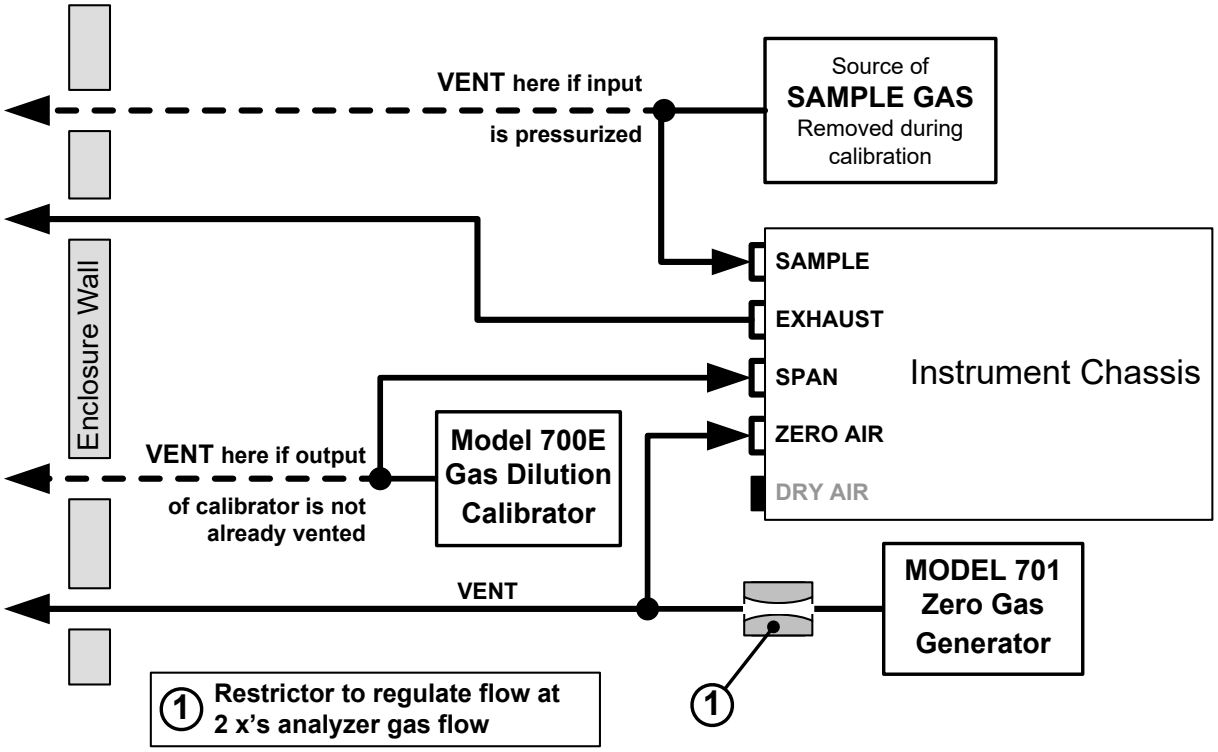

Figure 3-23: Gas Line Connections for the T400 Analyzer with Zero/Span Valve Option (OPT 50A)

3.6.1.1. Pneumatic Setup for the T400 Analyzer with Zero/Span Valve Option

For a Model T400 photometric ozone analyzer with the optional zero/span valves, attach the following pneumatic lines:

SAMPLE GAS SOURCE:

Attach a sample inlet line to the **SAMPLE** inlet fitting.

- Sample Gas pressure must equal ambient atmospheric pressure (1.0 psig)
- In applications where the sample gas is received from a pressurized manifold, a vent must be placed on the sample gas line. This vent line must be:
  - At least 0.2m long
  - No more than 2m long
  - Vented outside the shelter or immediate area surrounding the instrument

CALIBRATION GAS SOURCES:

SPAN GAS

Attach a gas line from the source of calibration gas (e.g. a Teledyne API T700 Dynamic Dilution Calibrator) to the **SPAN** inlet.

- Span gas can by generated by a M700E Mass Flow Calibrator equipped with a Photometer Option or an M703E UV Photometric Ozone Calibrator.

ZERO AIR

Attach a gas line from the source of zero air (e.g. a Teledyne API M701 zero air Generator) to the **ZERO AIR** inlet.

- Zero air can be supplied by the API M701 zero air generator.
- A restrictor is required to regulate the gas flow at 2x the gas flow of the analyzer.

VENTING

In order to prevent back diffusion and pressure effects, both the span gas and zero air supply lines should be:

- Vented outside the enclosure
- Not less than 2 meters in length
- Not greater than 10 meters in length

EXHAUST OUTLET

Attach an exhaust line to the **EXHAUST** outlet fitting. The exhaust line should be:

- ¼" PTEF tubing
- A maximum of 10 meters long
- Vented outside the T400 analyzer's enclosure

CAUTION – GENERAL SAFETY HAZARD

Venting should be outside the shelter or immediate area surrounding the instrument and conform to all safety requirements regarding exposure to O_3.

Once the appropriate pneumatic connections have been made, check all pneumatic fittings for leaks using the procedures defined in Section 10.3.4.

3.6.2. INTERNAL ZERO SPAN (IZS) OPTION (OPT 50G)

The Model T400 photometric ozone analyzer can also be equipped with an internal zero air and span gas generator. This option includes an ozone scrubber for producing zero air, a variable ozone generator for producing calibration span gas, and a valve for switching between the sample gas inlet and the output of the scrubber/generator.

A reference detector monitors the operating level of the IZS' ozone generator. The detector senses the intensity of the UV lamp internal to the IZS generator and converts this into a DC voltage. This voltage is used by the CPU as part of a feedback loop to directly adjust the brightness of the lamp, producing a more accurate and stable ozone concentration.

The ozone output level of the generator is directly controllable by the user via the front panel of the instrument or remotely via the analyzer's RS-232 Serial I/O ports.

- See Section 9.3 for instructions on setting the span gas level of the ozone generator.
- See Sections 3.3.2.3 and 3.5 for information on configuring this option and using the Serial I/O ports.
- See Appendix A for a list of variables (VARS) used to control this parameter.

See Section 9.6 for information on calibrating the output of the O_3 Generator.

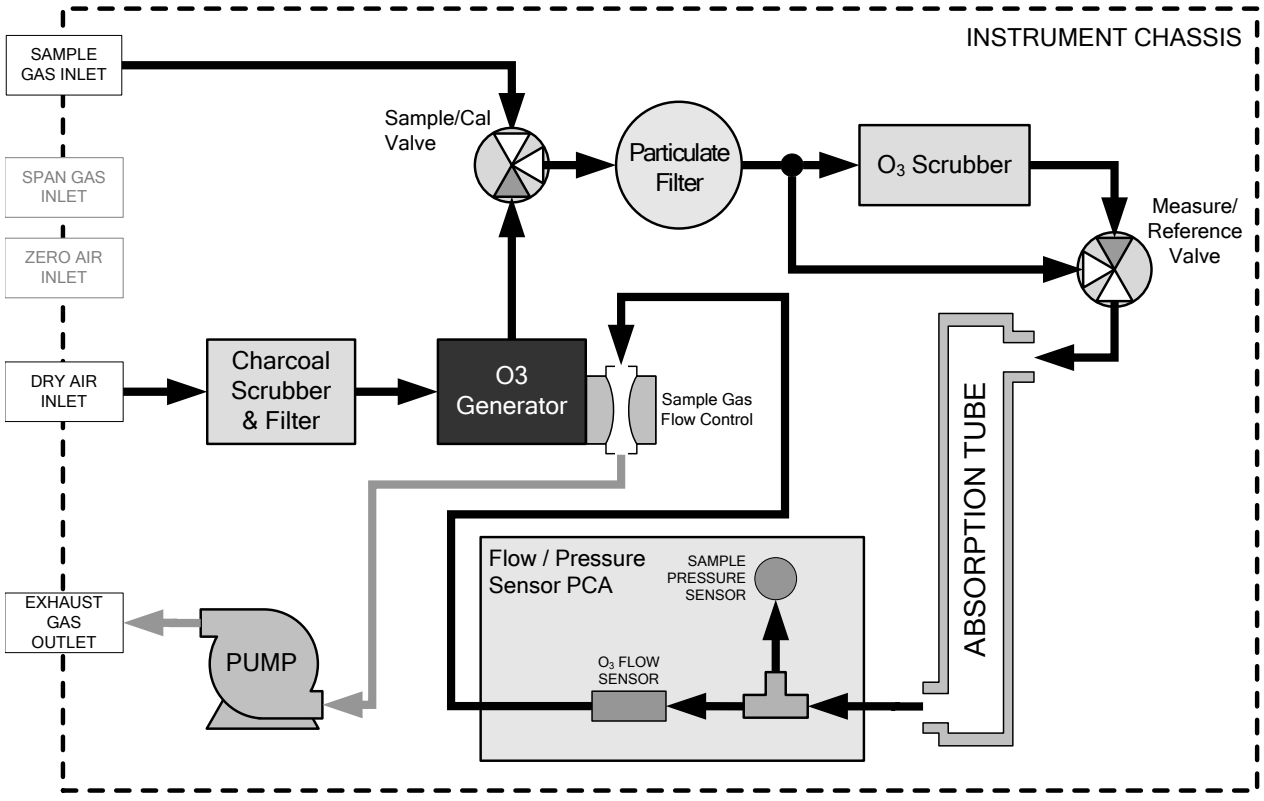

Figure 3-24: T400 Pneumatic Diagram with Internal Zero/Span (IZS) Option (OPT-50G)

For instructions on setting up a T400 analyzer equipped with the IZS option see Sections 3.3.2.3 and 3.3.3

The state of the Sample/Cal valves can be controlled:

- Manually via the analyzer's front panel;
- By activating the instrument's AutoCal feature (See Section 9.4);
- Remotely by using the External Digital I/O Control Inputs (See Section 9.3), or;
- Remotely via the RS-232/485 Serial I/O ports (See Section 8.2).

Table 3-10: Internal Zero/Span Valve Operating States

Option	Mode	Valve	Condition
50G	**SAMPLE**	Sample/Cal Valve	Open to SAMPLE inlet
		Ozone Generator	OFF
	ZERO CAL	Sample/Cal Valve	Open to Ozone Generator
		Ozone Generator	OFF
	SPAN CAL	Sample/Cal Valve	Open to Ozone Generator
		Ozone Generator	ON at intensity level set by user

4. OVERVIEW OF OPERATING MODES

The T400 analyzer software has a variety of operating modes. Most commonly, the analyzer will be operating in **SAMPLE** mode. In this mode, a continuous read-out of the O_3 concentrations is displayed on the front panel and is available to be output as analog signals from the analyzer's rear panel terminals. The **SAMPLE** mode also allows:

- **TEST** functions and **WARNING** messages to be examined
- Manual calibration operations to be initiated

The second most important operating mode is **SETUP** mode. This mode is used for configuring the various sub systems of the analyzer such as for the DAS system, the reporting ranges, or the serial (RS-232/RS-485/Ethernet) communication channels. The **SET UP** mode is also used for performing various diagnostic tests during troubleshooting.

Figure 4-1: Front Panel Display

The Mode field of the front panel display indicates to the user which operating mode the unit is currently running.

In addition to **SAMPLE** and **SETUP**, other operation modes of the analyzer are described in Table 4-1.

Table 4-1: Analyzer Operating Modes

MODE	EXPLANATION
DIAG	One of the analyzer's diagnostic modes is active.
LO CAL A	Unit is performing LOW SPAN (midpoint) calibration initiated automatically by the analyzer's AUTOCAL feature
LO CAL R	Unit is performing LOW SPAN (midpoint) calibration initiated remotely through the COM ports or digital control inputs.
M-P CAL	This is the basic calibration mode of the instrument and is activated by pressing the CAL button.
SAMPLE	Sampling normally, flashing text indicates adaptive filter is on.
SAMPLE A	Indicates that unit is in SAMPLE mode and the AUTOCAL feature is activated.
SETUP X.#[2]	SETUP mode is being used to configure the analyzer. The gas measurement will continue during this process.
SPAN CAL A[1]	Unit is performing SPAN calibration initiated automatically by the analyzer's AUTOCAL feature
SPAN CAL M[1]	Unit is performing SPAN calibration initiated manually by the user.
SPAN CAL R[1]	Unit is performing SPAN calibration initiated remotely through the COM ports or digital control inputs.
ZERO CAL A[1]	Unit is performing ZERO calibration procedure initiated automatically by the AUTOCAL feature.
ZERO CAL M[1]	Unit is performing ZERO calibration procedure initiated manually by the user.
ZERO CAL R[1]	Unit is performing ZERO calibration procedure initiated remotely through the COM ports or digital control inputs.

[1] Only appears on units with Z/S valve or IZS options.
[2] The revision of the analyzer firmware is displayed following the word SETUP, e.g., SETUP G.3.

4.1. SAMPLE MODE

This is the analyzer's standard operating mode. In this mode the instrument is calculating O_3 concentrations.

The T400 analyzer is a computer-controlled analyzer with a dynamic menu interface for easy and yet powerful and flexible operation. All major operations are controlled from the front panel display and touchscreen through these user-friendly menus.

To assist in navigating the system's software, a series of menu trees can be found in Appendix A of this manual.

Note **The flowcharts in this Section depict typical representations of the front panel display/touchscreen interface during the various operations being described. They are not intended to be exact and may differ slightly from the actual display of your system.**

Note **The ENTR button may disappear if you select a setting that is invalid or out of the allowable range for that parameter, such as trying to set the 24-hour clock to 25:00:00. Once you adjust the setting to an allowable value, the ENTR button will re-appear.**

4.1.1. TEST FUNCTIONS

A variety of **TEST** functions are available for viewing at the front panel whenever the analyzer is at the **MAIN MENU**. These functions provide information about the present

operating status of the analyzer and are useful during troubleshooting (see Section 11). Table 4-2 lists the available **TEST** functions.

To view these **TEST** functions, press:

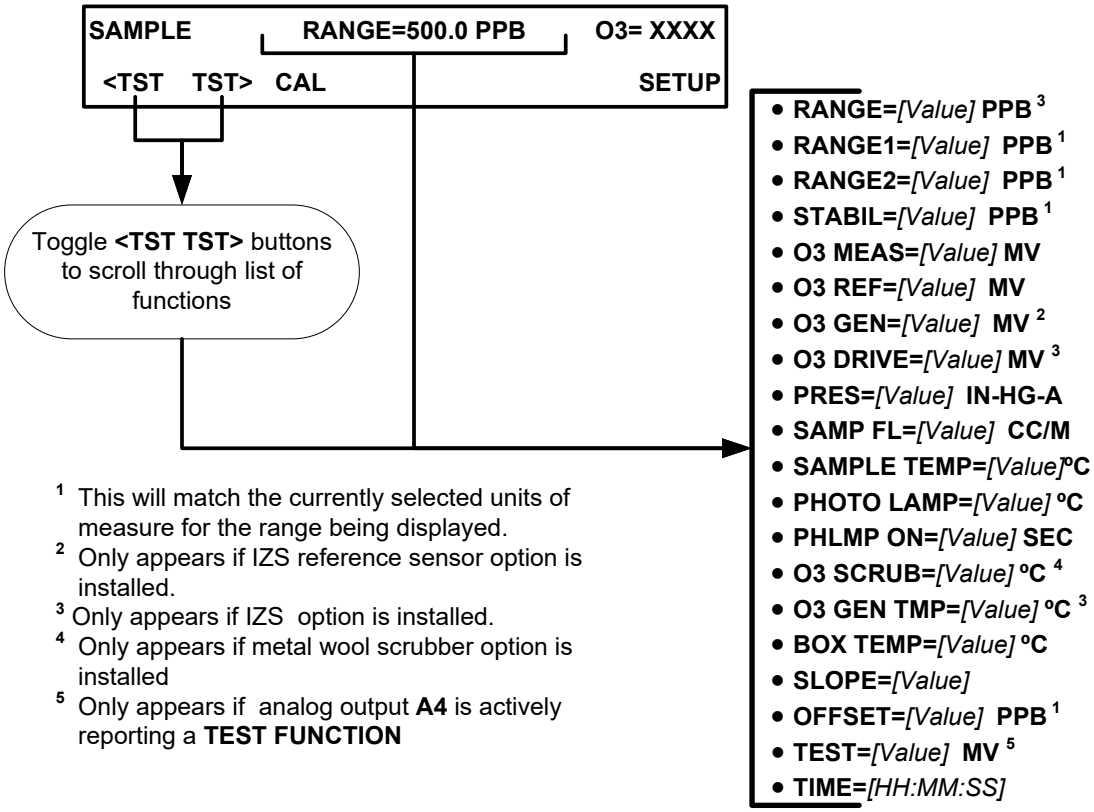

Figure 4-2: Viewing T400 Test Functions

Table 4-2: Test Functions Defined

DISPLAY	PARAMETER	UNITS	DESCRIPTION
RANGE **- -** **RANGE1** **RANGE2**	RANGE	**PPB,** **PPM,** **UGM** **&** **MGM**	The Full Scale limit at which the reporting range of the analyzer's ANALOG OUTPUTS is currently set. • **THIS IS NOT** the Physical Range of the instrument. See Section 5.4.1.1 for more information. • If **DUAL** or **AUTO** Range modes have been selected, two **RANGE** functions will appear, one for each range.
STABIL	STABILITY	**MV**	Standard deviation of O_3 Concentration readings. Data points are recorded every ten seconds. The calculation uses the last 25 data points.
O_3 MEAS	PHOTOMEAS	**MV**	The average UV Detector output during the MEASURE portion of the analyzer's measurement cycle.
O_3 REF	PHOTOREF	**MV**	The average UV Detector output during the REFERENCE portion of the analyzer's measurement cycle.
O_3 GEN[2]	O3GENREF	**MV**	The current output of the O_3 Generator Reference Detector representing the relative intensity of the O_3 generator UV Lamp. (2)
O_3 DRIVE[1]	O3GENDRIVE	**MV**	The Drive voltage used to control the intensity of the O_3 generator UV Lamp. (1)
PRES	SAMPPRESS	**IN-HG-A**	The absolute pressure of the Sample Gas as measured by a solid-state pressure sensor.
SAMP FL	SAMPFLOW	**CC/MIN**	Sample Gas mass flow rate as measured by the Flow Sensor located between the Optical Bench and the Sample Pump.
SAMPLE TEMP	SAMPTEMP	**°C**	The temperature of the gas inside the Sample Chamber.
PHOTO LAMP	PHOTOLTEMP	**°C**	The temperature of the UV Lamp in the Optical Bench.
O_3 SCRUB[3]	O3SCRUBTEMP	**°C**	The current temperature of the Metal Wool Scrubber.(3)
O_3 GEN TMP[1]	O3GENTEMP	**°C**	The temperature of the UV Lamp in the O_3 Generator.(1)
BOX TEMP	BOXTEMP	**°C**	The temperature inside the analyzer chassis.
SLOPE	SLOPE	**- -**	The Slope of the instrument as calculated during the last calibration activity. • When the unit is set for **SINGLE** or **DUAL** Range mode, this is the **SLOPE** of **RANGE1**. • When the unit is set for **AUTO** Range mode, this is the **SLOPE** of the currently active range.
OFFSET	OFFSET	**PPB**	The Offset of the instrument as calculated during the last calibration activity. When set for **SINGLE** or **DUAL** Range mode, this is the **OFFSET** of **RANGE1**.
TEST[4]	TESTCHAN	**MV**	Displays the signal level of whatever Test function is currently being output by the Analog Output Channel **A4**.(4)
TIME	CLOCKTIME	**HH:MM:SS**	The current time. This is used to create a time stamp on DAS readings, and by the AutoCal feature to trigger calibration events.

[1] Only appears if IZS option is installed.
[2] Only appears if IZS Reference Sensor option is installed.
[3] Only appears if Metal Wool Scrubber option is installed.
[4] Only appears if Analog Output A4 is actively reporting a Test Function.

4.1.2. WARNING MESSAGES

The most common and serious instrument failures will activate Warning Messages that are displayed on the analyzer's front panel. These are:

Table 4-3: Warning Messages Defined

MESSAGE	MEANING
ANALOG CAL WARNING	The A/D or at least one D/A channel has not been calibrated.
BOX TEMP WARNING	The temperature inside the T400 chassis is outside the specified limits.
CANNOT DYN SPAN[2]	Contact closure span calibration failed while *DYN_SPAN* was set to *ON*.
CANNOT DYN ZERO[3]	Contact closure zero calibration failed while *DYN_ZERO* was set to *ON*.
CONFIG INITIALIZED	Configuration storage was reset to factory configuration or erased.
DATA INITIALIZED	DAS data storage was erased before the last power up occurred.
LAMP DRIVER WARN	CPU is unable to communicate with one of the I^2C UV Lamp Drivers.
LAMP STABIL WARN	Photometer lamp reference step-changes occur more than 25% of the time.
O_3 ALARM1 WARN[6]	O_3 concentration alarm limit #1 exceeded.
O_3 ALARM2 WARN[6]	O_3 concentration alarm limit #2 exceeded.
O_3 GEN LAMP WARN[4]	The UV Lamp or Detector in the IZS module may be faulty or out of adjustment.
O_3 GEN REF WARNING[4]	The UV Lamp or Detector in the IZS module may be faulty or out of adjustment.
O_3 GEN TEMP WARN[4]	The UV Lamp Heater or Temperature Sensor in the IZS module may be faulty.
O_3 SCRUB TEMP WARN[5]	The Heater or Temperature Sensor of the O_3 Scrubber may be faulty.
PHOTO REF WARNING	The O_3 Reference value is outside of specified limits.
PHOTO TEMP WARNING	The UV Lamp Temperature is outside of specified limits.
REAR BOARD NOT DET	Motherboard was not detected during power up.
RELAY BOARD WARN	CPU is unable to communicate with the relay PCA.
SAMPLE FLOW WARN	The flow rate of the sample gas is outside the specified limits.
SAMPLE PRESS WARN	The pressure of the sample gas is outside the specified limits.
SAMPLE TEMP WARN	The temperature of the sample gas is outside the specified limits.
SYSTEM RESET[1]	The computer has rebooted.

[1] Clears 45 minutes after power up.
[2] Clears the next time successful zero calibration is performed.
[3] Clears the next time successful span calibration is performed.
[4] Only appears if the IZS option is installed.
[5] Only appears if the optional metal wool O_3 scrubber is installed.
[6] Only appears if concentration alarm option is elected.

See Section 11.1.1 for more information on using these messages to troubleshoot problems.

4.2. CALIBRATION MODE

In this mode the user can, in conjunction with introducing of zero or span gases of known concentrations into the analyzer, cause it to adjust and recalculate the slope (gain) and offset of the its measurement range. This mode is also used to check the current calibration status of the instrument. Pressing the CAL button, switches the T400 into calibration mode.

- For more information about setting up and performing standard calibration operations or checks, see Section 9.

4.2.1. CALIBRATION MODE WITH VALVE OPTIONS

If the instrument includes one of the available zero/span valve options, the **SAMPLE** mode display will also include **CALZ** and **CALS** buttons. Pressing either of these buttons also puts the instrument into calibration mode.

- The **CALZ** button is used to initiate a calibration of the analyzer's zero point using internally generated zero air.
- The **CALS** button is used to calibrate the span point of the analyzer's current reporting range using internally generated O_3 span gas.

For more information concerning calibration valve options, see Section 3.6.

- For information on using the automatic calibrations feature (**ACAL**) in conjunction with the one of the calibration valve options, see Sections 9.3.3 and 9.4.

Note

It is recommended that this span calibration be performed at 90% of full scale of the analyzer's currently selected reporting range.

EXAMPLES:

If the reporting range is set for 0 to 500 ppb, an appropriate span point would be 450 ppb.

If the of the reporting range is set for 0 to 1000 ppb, an appropriate span point would be 900 ppb.

4.3. SETUP MODE

The **SETUP** mode contains a variety of choices that are used to configure the analyzer's hardware and software features, perform diagnostic procedures, gather information on the instruments performance and configure or access data from the internal data acquisition system (DAS).

- For a visual representation of the software menu trees, refer to Appendix A-1.

Setup Mode is divided between Primary and Secondary Setup menus and can be protected through password security.

4.3.1. PASSWORD SECURITY

Setup Mode can be protected by password security through the SETUP>PASS menu (Section 5.2) to prevent unauthorized or inadvertent configuration adjustments.

4.3.2. PRIMARY SETUP MENU

The areas accessed under the **SETUP** mode are shown in Table 4-4 and Table 4-5.

Table 4-4: Primary Setup Mode Features and Functions

MODE OR FEATURE	CONTROL BUTTON	DESCRIPTION	MANUAL SECTION
Analyzer Configuration	**CFG**	Lists key hardware and software configuration information	5.1
Auto Cal Feature	**ACAL**	Used to set up and operate the AutoCal feature. • *Only appears if the analyzer has one of the calibration valve options installed (see Section 3.6).*	9.4
Internal Data Acquisition (DAS)	**DAS**	Used to set up the DAS system and view recorded data	7
Analog Output Reporting Range Configuration	**RNGE**	Used to configure the output signals generated by the instrument's analog outputs.	5.4
Calibration Password Security	**PASS**	Turns the calibration password feature ON/OFF	5.2
Internal Clock Configuration	**CLK**	Used to set or adjust the instrument's internal clock	5.6
Advanced **SETUP** features	**MORE**	Accesses the instrument's secondary setup menu	See Table 4-5

Table 4-5: Secondary Setup Mode Features and Functions

MODE OR FEATURE	CONTROL BUTTON	DESCRIPTION	MANUAL SECTION
External Communication Channel Configuration	**COMM**	Used to set up and operate the analyzer's various external I/O channels including RS-232; RS-485, modem communication and/or Ethernet access.	8
System Status Variables	**VARS**	Used to view variables related to the instrument's current operational status • Changes made to any variable are not acknowledged and recorded in the instrument's memory until the **ENTR** button is pressed. • Pressing the **EXIT** button ignores the new setting. • If the **EXIT** button is pressed before the **ENTR** button, the analyzer will beep, alerting the user that the newly entered value has been lost.	5.8
System Diagnostic Features and Analog Output Configuration	**DIAG**	Used to access a variety of functions that are used to configure, test or diagnose problems with a variety of the analyzer's basic systems. Most notably, the menus used to configure the output signals generated by the instrument's analog outputs are located here.	5.9 & 5.10

IMPORTANT

IMPACT ON READINGS OR DATA

Any changes made to a variable (VARS) during the SETUP procedures are not acknowledged by the instrument until the ENTR button is pressed. If the EXIT button is pressed before the ENTR button, the analyzer will beep, alerting the user that the newly entered value has not been accepted.

5. SETUP MENU

The SETUP menu is used to set instrument parameters for performing configuration, calibration, reporting and diagnostics operations according to user needs.

5.1. SETUP → CFG: CONFIGURATION INFORMATION

Pressing the CFG button displays the instrument's configuration information. This display lists the analyzer model, serial number, firmware revision, software library revision, CPU type and other information. Use this information to identify the software and hardware when contacting Technical Support. Special instrument or software features or installed options may also be listed here.

To access the configuration table, press:

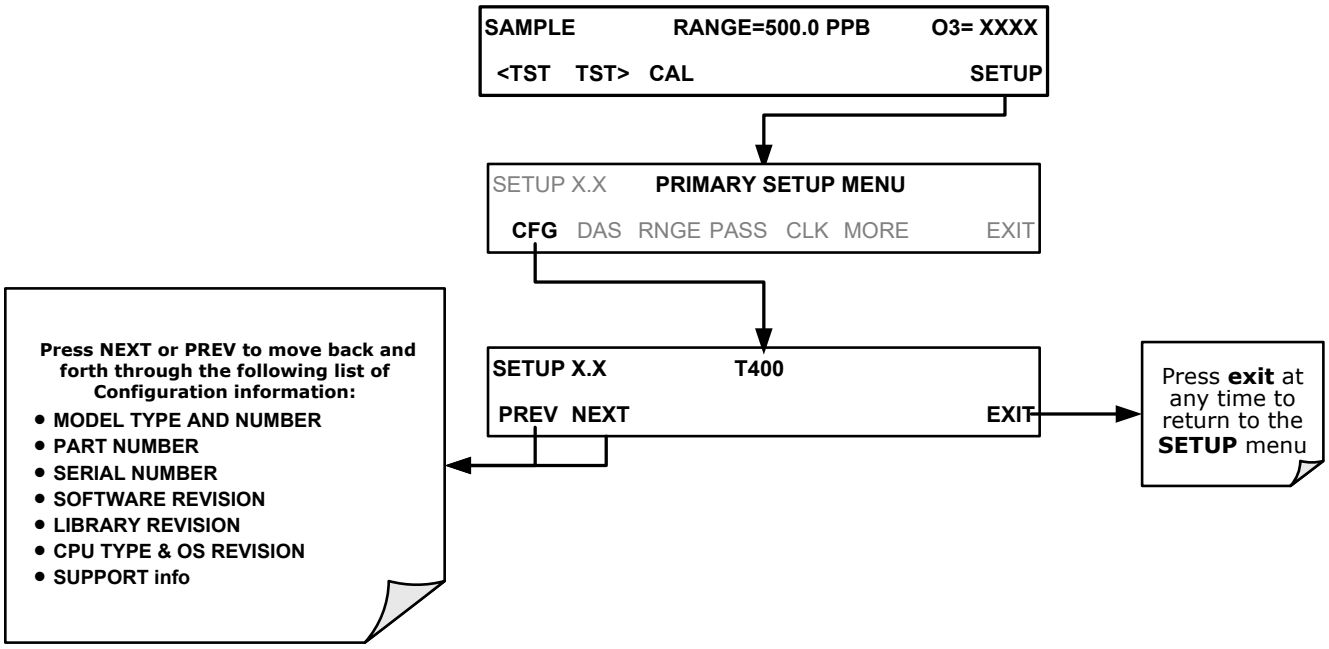

5.2. SETUP → DAS: INTERNAL DATA ACQUISITION SYSTEM

Use the SETUP>DAS menu to capture and record data. Refer to Section 7 for configuration and operation details.

5.3. SETUP → ACAL: AUTOMATIC CALIBRATION OPTION

The menu button for this option appears only when the instrument has the zero span and/or IZS options. See Section 9.4 for details.

5.4. SETUP → RNGE: ANALOG OUTPUT REPORTING RANGE CONFIGURATION

Use the SETUP>RNGE menu to configure output reporting ranges, including scaled reporting ranges to handle data resolution challenges. This section also describes configuration for Single, Dual, and Auto Range modes.

5.4.1.1. Physical Range versus Analog Output Reporting Ranges

Functionally, the Model T400 photometric analyzer has one hardware "physical range" that is capable of determining O_3 concentrations between 0 ppb and 10,000 ppb. This architecture improves reliability and accuracy by avoiding the need for extra, switchable, gain-amplification circuitry. Once properly calibrated, the analyzer's front panel will accurately report concentrations along the entire span of its physical range.

Because most applications use only a small part of the analyzer's physical range, the width of the T400 analyzer's physical range can create data resolution problems for most analog recording devices. For example, in an application where the expected concentration of O_3 is typically less than 500 ppb, the full scale of expected values is only 5% of the instrument's 10,000 ppb physical range. Unmodified, the corresponding output signal would also be recorded across only 5% of the range of the recording device.

The T400 solves this problem by allowing the user to select a scaled reporting range for the analog outputs that only includes that portion of the physical range relevant to the specific application.

Note **Only the reporting range of the analog outputs is scaled. Both the DAS values stored in the CPU's memory and the concentration values reported on the front panel are unaffected by the settings chosen for the reporting range(s) of the instrument.**

5.4.1.2. **Analog Output Ranges for O_3 Concentration**

The analyzer has two active analog output signals related to O_3 concentration that are accessible through a connector on the rear panel.

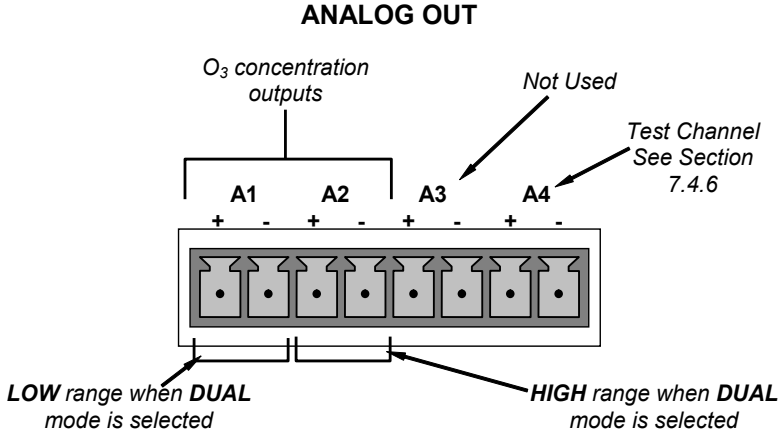

Figure 5-1: Analog Output Connector Pin Out

The **A1** and **A2** channels output a signal that is proportional to the O_3 concentration of the sample gas. They can be configured:

- with independent reporting ranges reporting a "single" output signal (**SNGL** Mode, see Section 5.4.1.3)
- to be operated completely independently (**DUAL** Mode, see Section 5.4.1.4)
- or to automatically switch between the two ranges dynamically as the concentration value fluctuates (**AUTO** modes, see Section 5.4.1.5).

The user can set the units of measure, measure span and signal scale of each output in a variety of combinations.

EXAMPLE:

A1 OUTPUT: Output Signal = 0-5 VDC representing 0-1000 ppb concentration values

A2 OUTPUT: Output Signal = 0 – 10 VDC representing 0-500 ppb concentration values.

Both the **A1** and **A2** outputs can be:

- Configured full scale outputs of: 0 - 0.1 VDC; 0 - 1VDC; 0 - 5VDC or; 0 - 10VDC.
- Equipped with optional 0-20 mADC current loop drivers (OPT 41, see Section 3.3.1.4) and configured for any current output within that range (e.g. 0-20, 2-20, 4-20, etc.).

The user may also add a signal offset independently to each output (see Section 5.10.1.8) to match the electronic input requirements of the recorder or data logger to which the output is connected.

DEFAULT SETTINGS

The default setting for these the reporting ranges of the analog output channels **A1** and **A2** are:

- SNGL mode
- 0 to 400.0 ppb
- 0 to 5 VDC

Reporting range span may be viewed via the front panel by viewing the **RANGE** test function. If the **DUAL** or **AUTO** modes are selected, the **RANGE** test function will be replaced by two separate functions, **RANGE1** & **RANGE2**. Reporting range status is also available as output via the external digital I/O status bits (see Section 3.3.1.5).

Note

Upper span limit setting for the individual range modes are shared. Resetting the span limit in one mode also resets the span limit for the corresponding range in the other modes as follows:

SNGL	DUAL		AUTO
Range	←→ Range1 (Low)	←→	Low Range
	Range2 (Hi)	←→	High Range

5.4.1.3. RNGE → MODE → SNGL: Single Range Mode Configuration

The single range mode sets a single maximum range for the both the **A1** and **A2** analog outputs. If the single range is selected, both outputs are slaved together and will represent the same reporting range span (e.g. 0-500 ppb); however, their electronic signal levels may be configured for different ranges (e.g. 0-10 VDC vs. 0-.1 VDC; see Section 5.10.1.6).

This Reporting range can be set to any value between 0.1 ppb and 10,000 ppb. To select **SINGLE** range mode and set the upper limit of the reporting range, press:

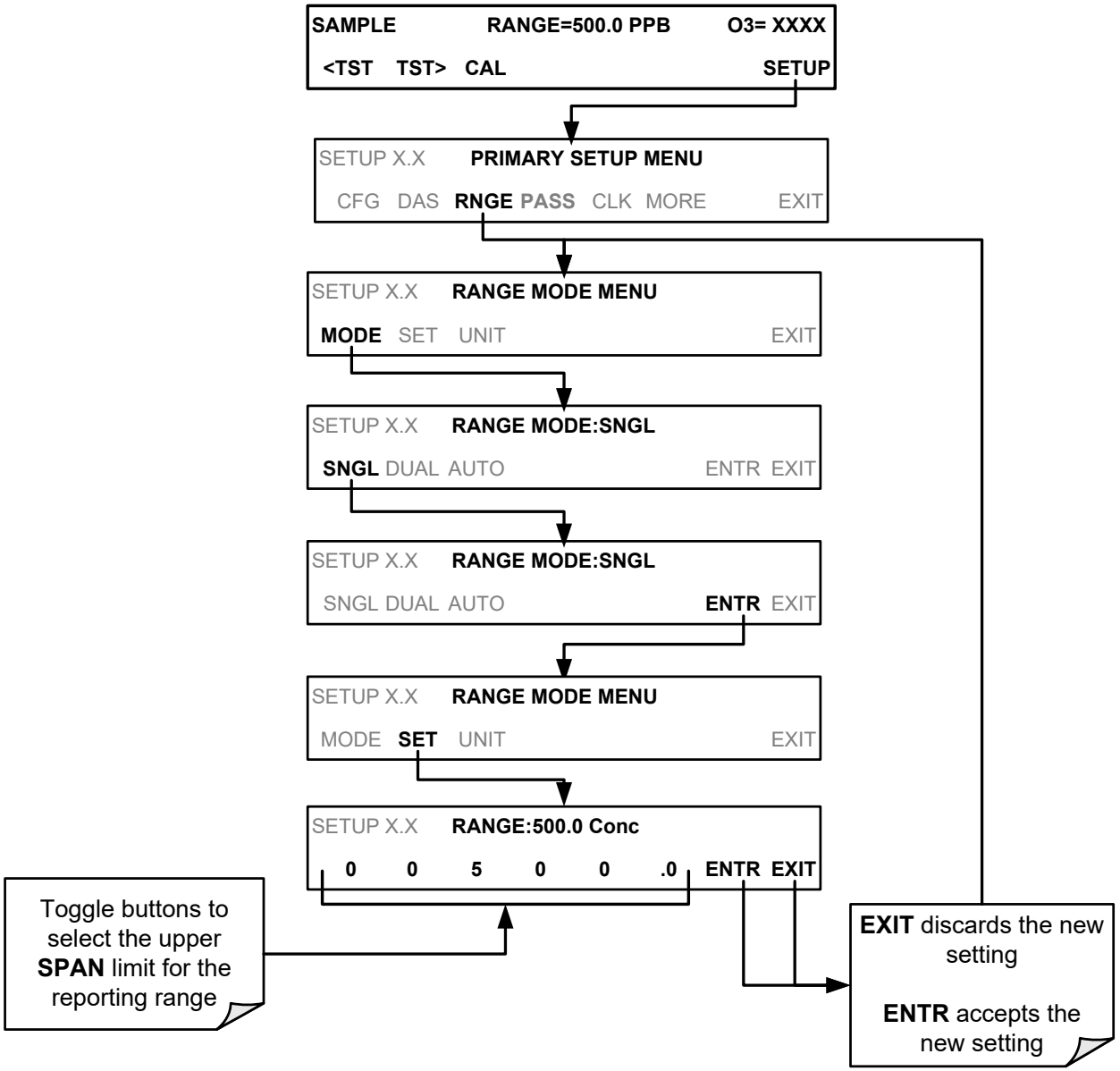

Note **This is the default reporting range mode for the analyzer.**

5.4.1.4. RNGE → MODE → DUAL: Dual Range Mode Configuration

DUAL range mode allows the **A1** and **A2** outputs to be configured with separate reporting range spans as well as separate electronic signal levels. The analyzer software calls these two ranges **LOW** and **HI**.

- The **LOW** range setting corresponds with the analog output labeled **A1** on the rear panel of the instrument and is viewable via the test function **RANGE1**.
- The **HIGH** range setting corresponds with the **A2** output and is viewable via the test function **RANGE2**.
- While the software labels these two ranges as **LOW** and **HI**, when in **DUAL** mode their upper limits need not conform to that convention. The upper span limit of the **LOW/RANGE1** can be a higher number than that of **HI/RANGE2**

To set the ranges press:

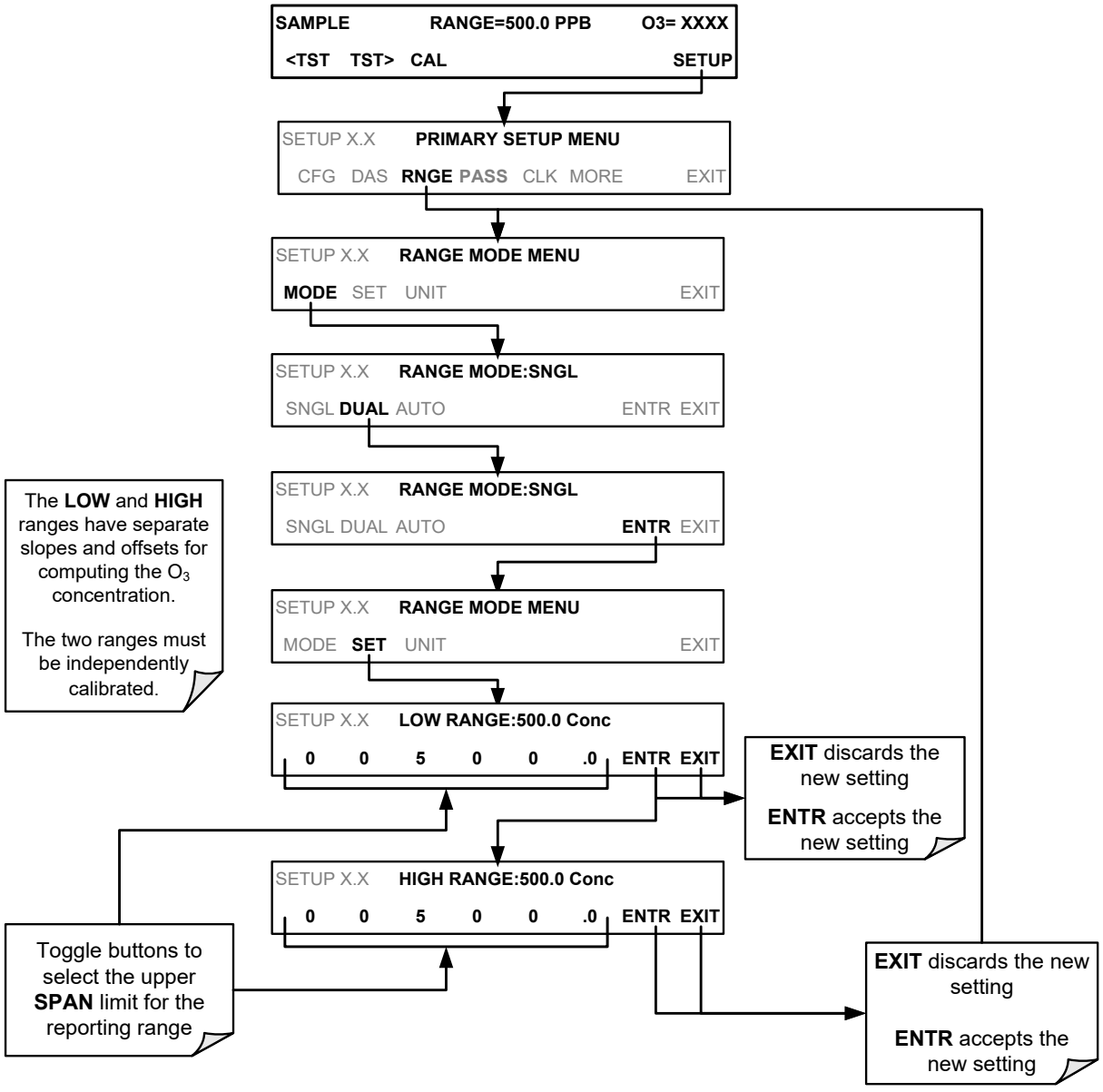

.

5.4.1.5. RNGE → MODE → AUTO: Auto Range Mode Configuration

AUTO range mode gives the analyzer the ability to output data via a **LOW** range (displayed on the front panel as **RANGE1**) and **HIGH** range (displayed on the front panel as **RANGE2**) on a single analog output.

When the **AUTO** range mode is selected, the analyzer automatically switches back and forth between user selected **LOW** & **HIGH** ranges depending on the level of the O_3 concentration.

- The unit will move from **LOW** range to **HIGH** range when the O_3 concentration exceeds 98% of the LOW range span limit.
- The unit will return from **HIGH** range back to **LOW** range once the O_3 concentration falls below 75% of the **LOW** range span limit.

To set the ranges press:

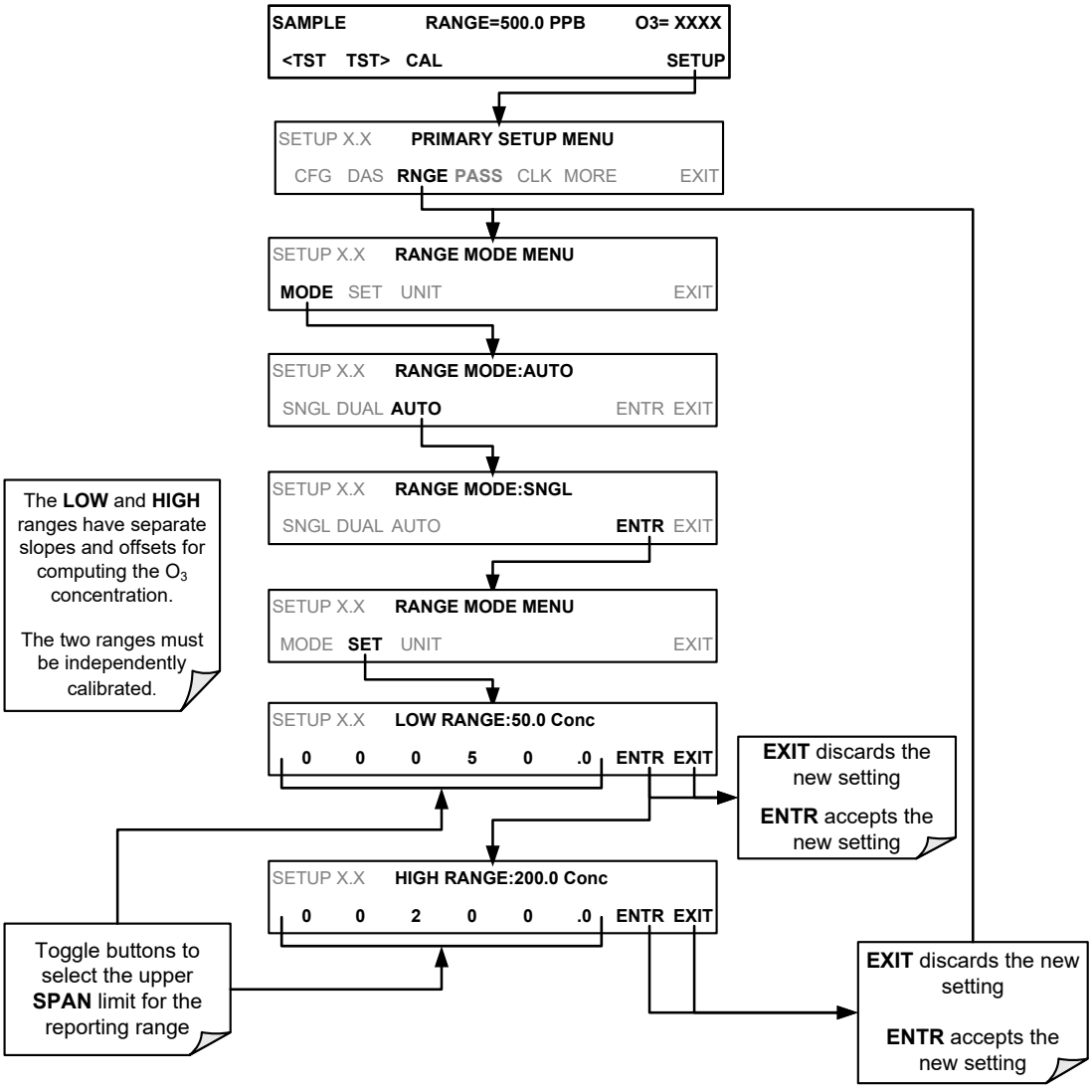

Note

Do not set the LOW range (RANGE1) of the instrument with a higher span limit than the HIGH range (RANGE2). This will cause the unit to stay in the low reporting range perpetually and defeat the function of the AUTO range mode.

5.4.1.6. SETUP → RNGE → UNIT: Setting the Reporting Range Unit Type

The T400 can display concentrations in ppb, ppm, ug/m^3, mg/m^3 units. Changing units affects all of the COM port values, and all of the display values for all reporting ranges. To change the units of measure press**:**

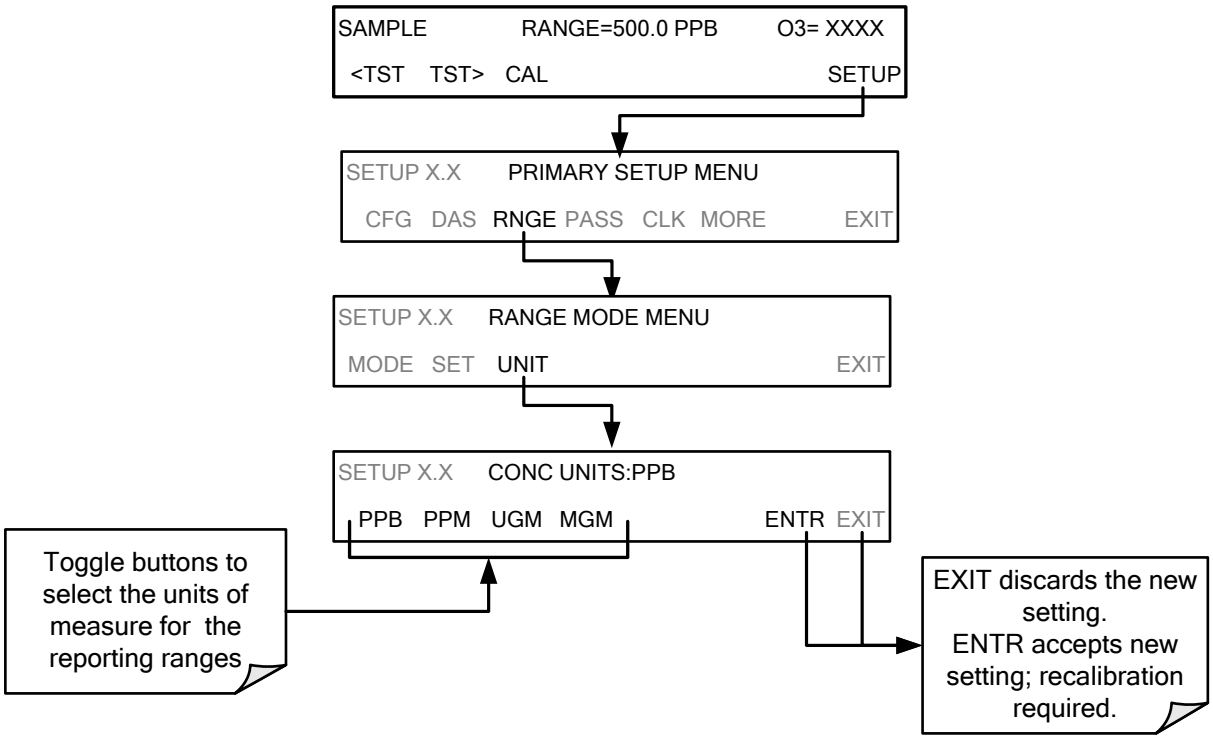

Note

Concentrations displayed in mg/m^3 and ug/m^3 use 0°C , 760 mmHg for Standard Temperature and Pressure (STP). Consult your local regulations for the STP used by your agency.

Important

Once the Units of Measurement have been changed, the unit MUST be recalibrated, as the "expected span values" previously in effect will no longer be valid. Simply entering new expected span values without running the entire calibration routine is not sufficient. The following equations give approximate conversions between volume/volume units and weight/volume units:

O3 ppb x 2.14 = O3 ug/m3

O3 ppm x 2.14 = O3 mg/m3.

5.5. SETUP → PASS: PASSWORD PROTECTION

The menu system provides password protection of the calibration and setup functions to prevent unauthorized adjustments. When the password feature has been enabled (SETUP>PASS>ON), the system prompts the user for a password to enter the SETUP

menu. This allows normal operation of the instrument, but requires the password (101) to access to the menus under SETUP. When PASSWORD is disabled (SETUP>PASS>OFF), any operator can enter the Primary Setup (SETUP) and Secondary Setup (SETUP>MORE) menus. Whether PASSWORD is enabled or disabled, a password (default 818) is required to enter the VARS or DIAG menus in the SETUP>MORE menu.

Table 5-1: Password Levels

PASSWORD	LEVEL	MENU ACCESS ALLOWED
Null (000)	Operation	All functions of the MAIN menu: **TEST, GEN,** initiate **SEQ , MSG, CLR**
101	Configuration/Maintenance	Access to primary and secondary SETUP menus when PASSWORD enabled.
818	Configuration/Maintenance	Access to DIAG and VARS menus under the secondary SETUP menu whether PASSWORD is enabled or disabled.

To enable or disable password protection, press:

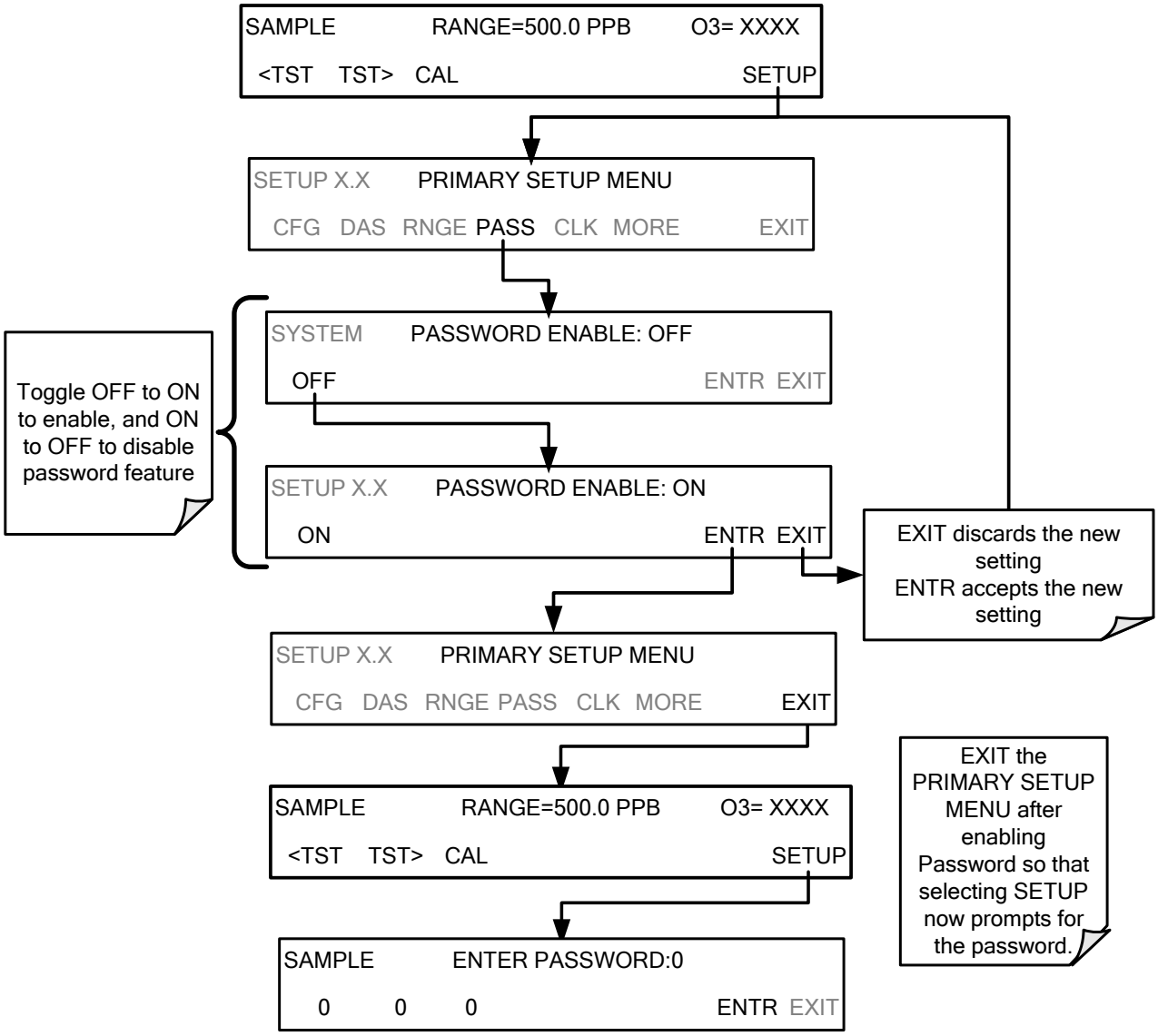

Example: If password protection is enabled, the following menu button sequence would be required to enter the **VARS** or **DIAG** submenus:

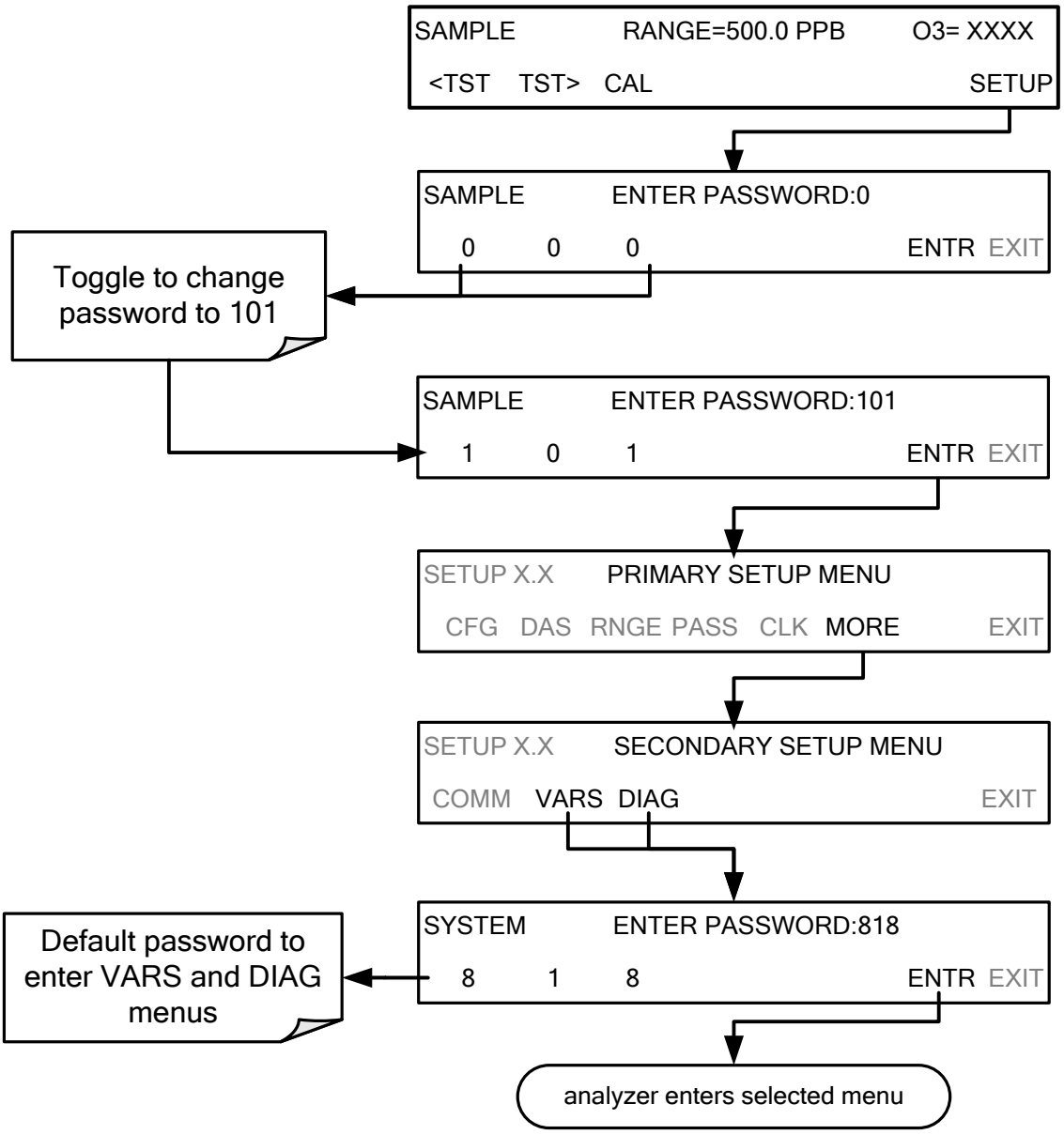

Note

Whether PASSWORD is enabled or disabled, the instrument prompts for a password to enter the VARS and DIAG menus. The menu interface displays the default password (818) upon either menu. Press ENTR to access the selected menu.

5.6. SETUP → CLK: SETTING THE T400 ANALYZER'S INTERNAL TIME-OF-DAY CLOCK AND ADJUSTING SPEED

5.6.1. SETTING THE INTERNAL CLOCK'S TIME AND DAY

The T400 has a time of day clock that supports the **DURATION** step of the automatic calibration (**ACAL**) sequence feature, time of day TEST function, and places a time stamp on readings for the DAS feature and most COMM port messages.

To set the clock's time and date, press:

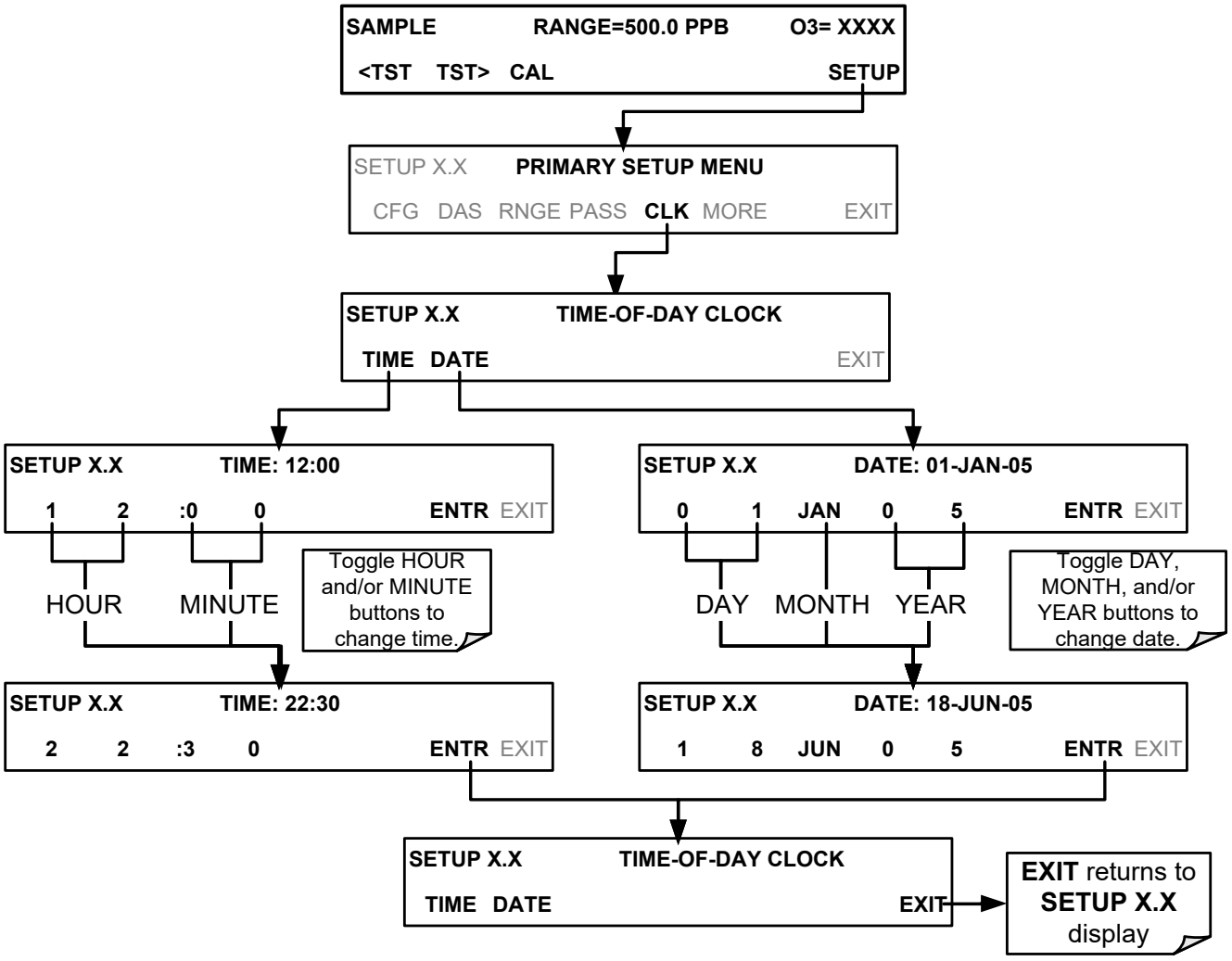

5.6.2. ADJUSTING THE INTERNAL CLOCK'S SPEED

In order to compensate for CPU clocks which run faster or slower, you can adjust a variable called **CLOCK_ADJ** to speed up or slow down the clock by a fixed amount every day.

The **CLOCK_AD** variable is accessed via the **VARS** submenu: To change the value of this variable, press:

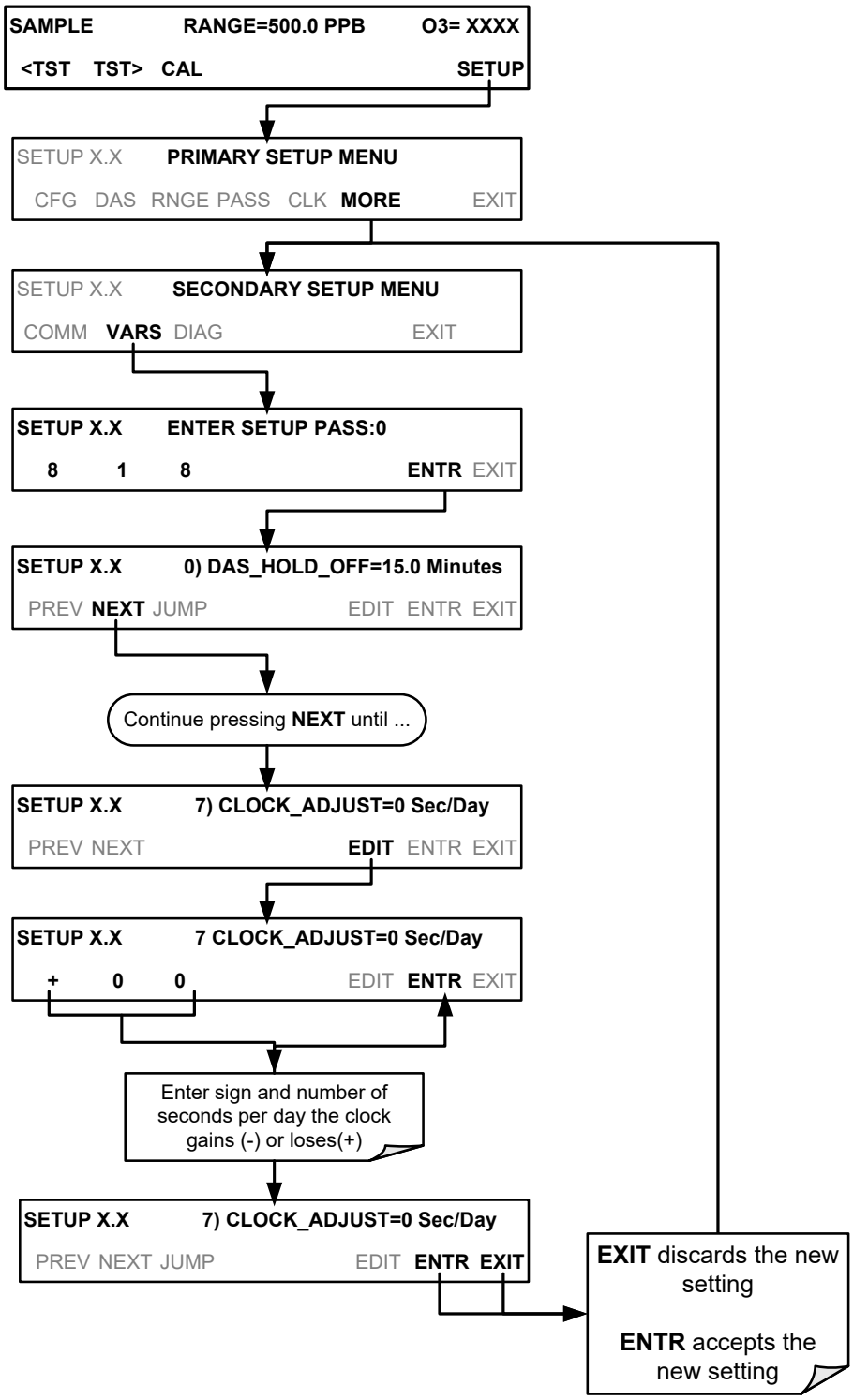

5.7. SETUP → COMM: COMMUNICATIONS PORTS

This section introduces the communications setup menu; Section 6 provides the setup instructions and operation information. Press SETUP>MORE>COMM to arrive at the communications menu.

5.7.1. ID (MACHINE IDENTIFICATION)

Press ID to display and/or change the Machine ID, which must be changed to a unique identifier (number) when more than one instrument of the same model is used:

- in an RS-232 multidrop configuration
- on the same Ethernet LAN
- when applying MODBUS protocol
- when applying Hessen protocol

The default **ID** is typically the same as the model number, although it may sometimes be "0". Press any button(s) in the MACHINE ID menu until the Machine ID Parameter field displays the desired identifier.

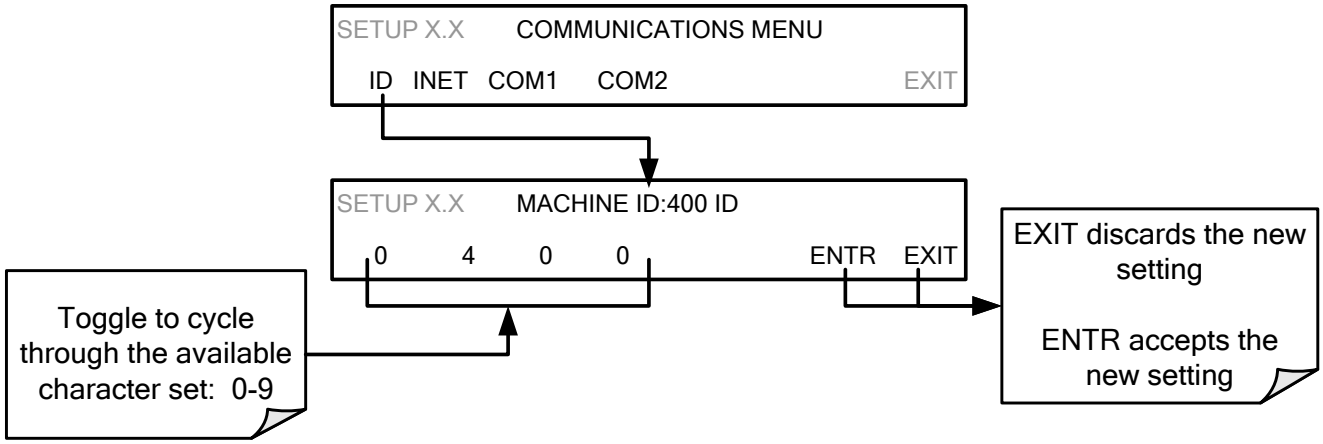

The ID can be any 4-digit number and can also be used to identify analyzers in any number of ways (e.g., location numbers, company asset number, etc.).

5.7.2. INET (ETHERNET)

Use SETUP>COMM>INET to configure Ethernet communications, whether manually or via DHCP. Please see Section 6.5 for configuration details.

5.7.3. COM1 AND COM2 (MODE, BAUD RATE AND TEST PORT)

Use the SETUP>MORE>COMM>COM1[COM2] menus to:

- configure communication modes (Section 6.2.1)
- view/set the baud rate (Section 6.2.2)
- test the connections of the com ports (Section 6.2.3)

Configuring COM1 or COM2 requires setting the DCE DTE switch on the rear panel. Section 6.1 provides DCE DTE information.

5.8. SETUP → VARS: VARIABLES SETUP AND DEFINITION

The T400 has several user-adjustable software variables, which define certain operational parameters. Usually, these variables are automatically set by the instrument's firmware, but can be manually re-defined using the **VARS** menu.

The following table lists the variables that are available within the 101 password protected level. See Appendix A for a detailed listing of the T400 variables that are accessible through the remote interface.

Table 5-2: Variable Names (VARS)

NO.	VARIABLE	DESCRIPTION	ALLOWED VALUES	VARS DEFAULT VALUES
0	**DAS_HOLD_OFF**	Changes the internal Data Acquisition System (DAS) **HOLDOFF** timer: No data is stored in the DAS channels during situations when the software considers the data to be questionable, such as during warm up or just after the instrument returns from one of its calibration mode to **SAMPLE** Mode.	May be set for intervals between 0.5 – 20 min	15 min.
1	**CONC_PRECISION**	Allows the user to set the number of significant digits to the right of the decimal point display of concentration and stability values.	AUTO, 1, 2, 3, 4	AUTO
2	**PHOTO_LAMP**[4]	Allows adjustment of the temperature set point for the photometer UV lamp in the optical bench.	0 - 100°C	58°C
3	**O3_GEN_LAMP**[1,4]	Allows adjustment of the temperature set point for the UV lamp in the O_3 generator option.[1]	0 - 100°C	48°C
4	**O3_GEN_LOW1**[1]	Allows adjustment of the O_3 generator option for the low (mid) span calibration point on **RANGE1**[2] during 3-point calibration checks.[1]	0 – 1500 ppb	100 ppb
5	**O3_GEN_LOW2**[1]	Allows adjustment of the O_3 Generator Option for the low (mid) span calibration point on **RANGE2**[3] during 3-point calibration checks.[1]	0– 1500 ppb	100 ppb
6	**O3_SCRUB_SET**[1,4]	Allows adjustment of the temperature set point for the heater attached to the metal wool scrubber option along with set points for both the High and Low alarm limits for the heater.[1]	0 - 200°C	110°C
7	**CLOCK_ADJ**	Adjusts the speed of the analyzer's clock. Choose the + sign if the clock is too slow, choose the - sign if the clock is too fast.	-60 to +60 s/day	0 sec

[1] Although, this variable may appear in the list even when the associated option is not installed. It is only effective when that option is installed and operating.

[2] **RANGE1** is the default range when the analyzer is set for **SINGLE** range mode and the **LOW** range when the unit is set for **AUTO** range mode.

[3] **RANGE2 HI** range when the unit is set for **AUTO** range mode.

[4] **DO NOT ADJUST OR CHANGE** this value unless instructed to by Teledyne API Technical Support personnel.

To access and navigate the **VARS** menu, press:

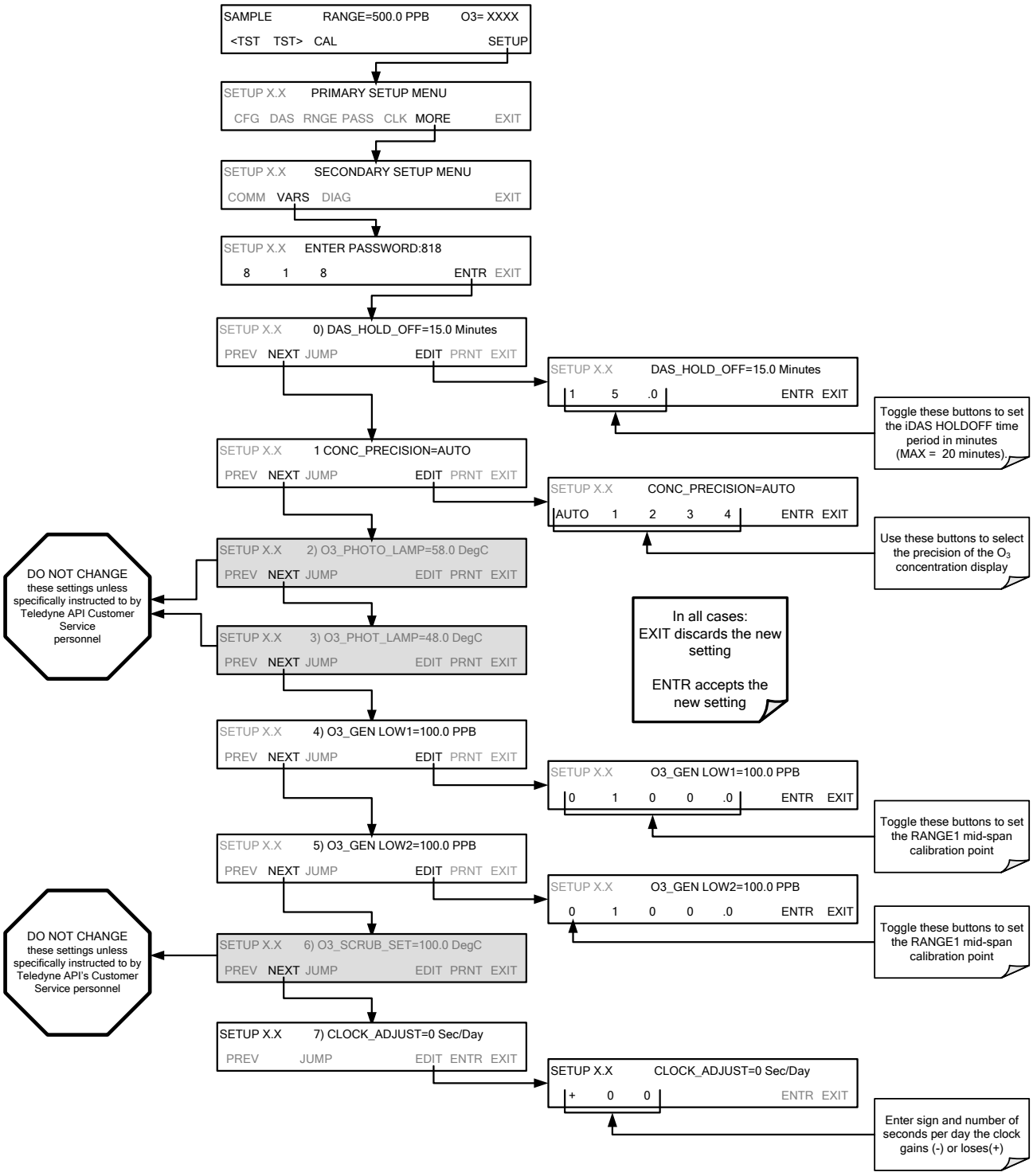

IMPORTANT

IMPACT ON READINGS OR DATA

There is a 2-second latency period between when a VARS value is changed and the new value is stored into the analyzer's memory. DO NOT turn the analyzer off during this period or the new setting will be lost.

5.9. SETUP → DIAG: DIAGNOSTICS FUNCTIONS

A series of diagnostic tools is grouped together under the **SETUP→MORE→DIAG** menu. As these parameters are dependent on firmware revision, (see Appendix A). These tools can be used in a variety of troubleshooting and diagnostic procedures and are referred to in many places of the maintenance and trouble-shooting sections of this manual.

The various operating modes available under the **DIAG** menu are:

Table 5-3: Diagnostic Mode (DIAG) Functions

DIAG SUBMENU	SUBMENU FUNCTION	Front Panel Mode Indicator	MANUAL SECTION
SIGNAL I/O	Allows observation of all digital and analog signals in the instrument. Allows certain digital signals such as valves and heaters to be toggled **ON** and **OFF**.	**DIAG I/O**	11.1.3
ANALOG OUTPUT	When entered, the analyzer performs an analog output step test. This can be used to calibrate a chart recorder or to test the analog output accuracy.	**DIAG AOUT**	11.7.8.1
ANALOG I/O CONFIGURATION	The signal levels of the instrument's analog outputs may be calibrated (either individually or as a group). Various electronic parameters such as signal span, and offset are available for viewing and configuration.	**DIAG AIO**	5.10
O_3 GEN CALIBRATION[1]	The analyzer is performing an electric test. This test simulates IR detector signal in a known manner so that the proper functioning of the sync/demod board can be verified.	**DIAG O3GEN**	9.6
DARK CALIBRATION	The analyzer is performing a dark calibration procedure. This procedure measures and stores the inherent DC offset of the sync/demod board electronics.	**DIAG DARK**	9.5.1
FLOW CALIBRATION	This function is used to calibrate the gas flow output signals of sample gas and ozone supply. These settings are retained when exiting **DIAG**.	**DIAG FCAL**	9.5.2
TEST CHAN OUTPUT	Configures the **A4** analog output channel.	**DIAG TCHN**	5.10.1.9

[1] Only appears if the IZS option is installed.

To access the various **DIAG** submenus, press:

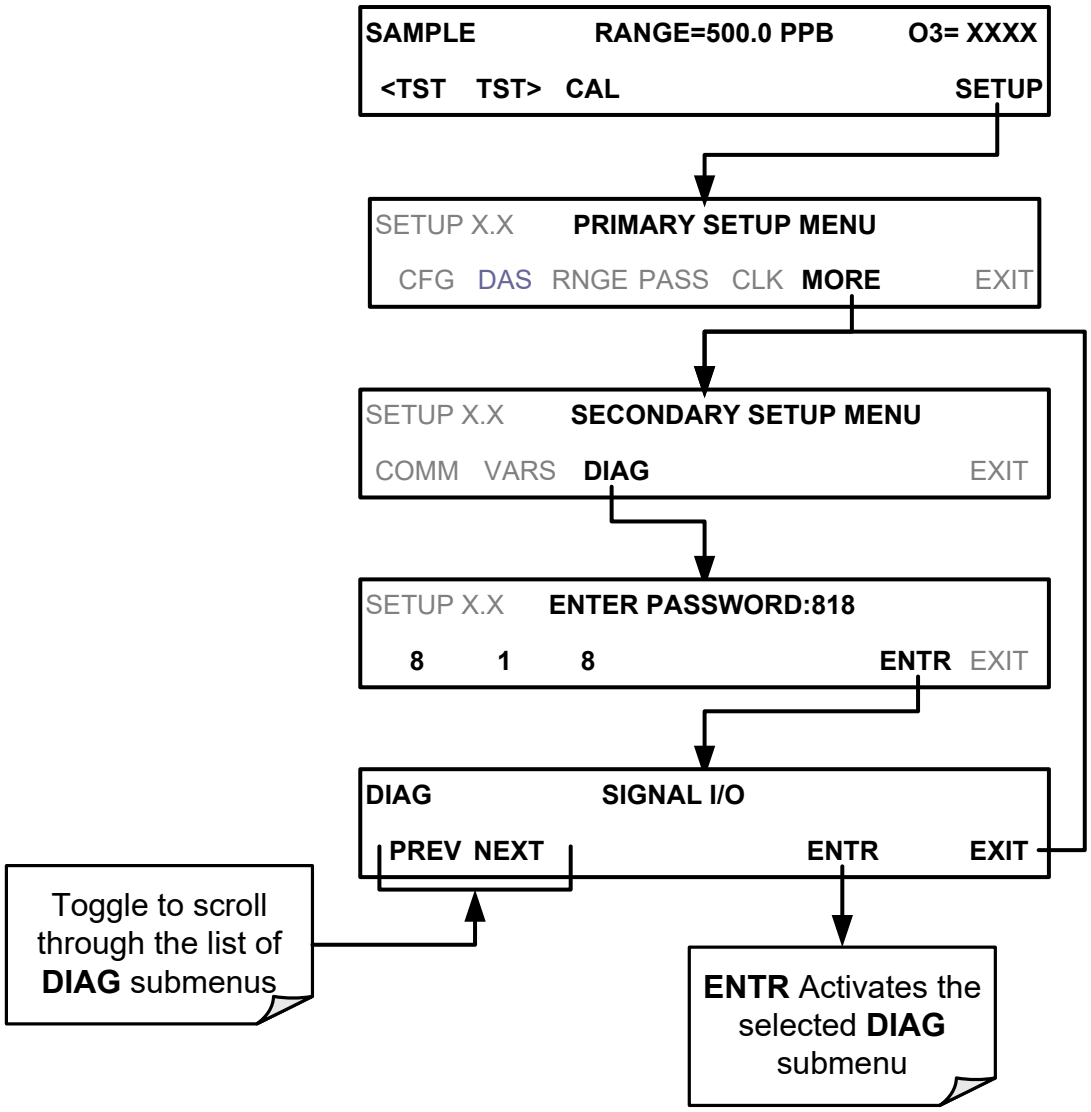

Figure 5-2: Accessing the DIAG Submenus

5.10. USING THE MODEL T400 ANALYZER'S ANALOG I/O

Table 5-4 lists the analog I/O functions available in the T400 analyzer.

Table 5-4: DIAG - Analog I/O Functions

SUB MENU	FUNCTION	MANUAL SECTION
AOUT CALIBRATED	Initiates a calibration of the **A1**, **A2** and **A4** analog output channels, which determines the slope and offset inherent in the circuitry of each output. These values are stored in the and applied to the output signals by the CPU automatically	5.10.1.1
CONCOUT_1[1]	Sets the basic electronic configuration of the **A1** output. There are four options: • **RANGE**: Selects the signal type (voltage or current loop) and level of the output • **A1 OFS**: Allows them input of a DC offset to let the user manually adjust the output level • **AUTO CAL**: Enables / Disables the **AOUT CALIBRATION** Feature • **CALIBRATED**: Performs the same calibration as **AOUT CALIBRATED**, but on this one channel only.	5.10
CONCOUT_2[1]	Sets the basic electronic configuration of the **A2** output. There are three options: • **RANGE**: Selects the signal type (voltage or current loop) and level of the output • **A2 OFS**: Allows them input of a DC offset to let the user manually adjust the output level • **AUTO CAL**: Enables / Disables the **AOUT CALIBRATION** Feature • **CALIBRATED**: Performs the same calibration as **AOUT CALIBRATED**, but on this one channel only.	
TEST OUTPUT[1]	Sets the basic electronic configuration of the **A4** output. There are three options: • **RANGE**: Selects the signal type (voltage or current loop) and level of the output • **A4 OFS**: Allows them input of a DC offset to let the user manually adjust the output level • **AUTO CAL**: Enables / Disables the **AOUT CALIBRATION** Feature • **CALIBRATED**: Performs the same calibration as **AOUT CALIBRATED**, but on this one channel only.	5.10.1.9
AIN CALIBRATED	Initiates a calibration of the A-to-D Converter circuit located on the Motherboard.	5.10.2
XIN1 . . . **XIN8**	For each of 8 external analog inputs channels, shows the gain, offset, engineering units, and whether the channel is to show up as a Test function.	
[1]Changes to **RANGE** or **REC_OFS** require recalibration of this output.		

5.10.1. ADJUSTING & CALIBRATING THE ANALOG OUTPUT SIGNALS

The T400 analyzer comes equipped with three analog outputs. The first two outputs (**A1** & **A2)** carry analog signals that represent the currently measured O_3 output (see Section 5.4.1.2). The third output (**A4**) can be set by the user to carry the current signal level of any one of several operational parameters (see Table 5-8).

To access the **ANALOG I/O CONFIGURATION** sub menu, press:

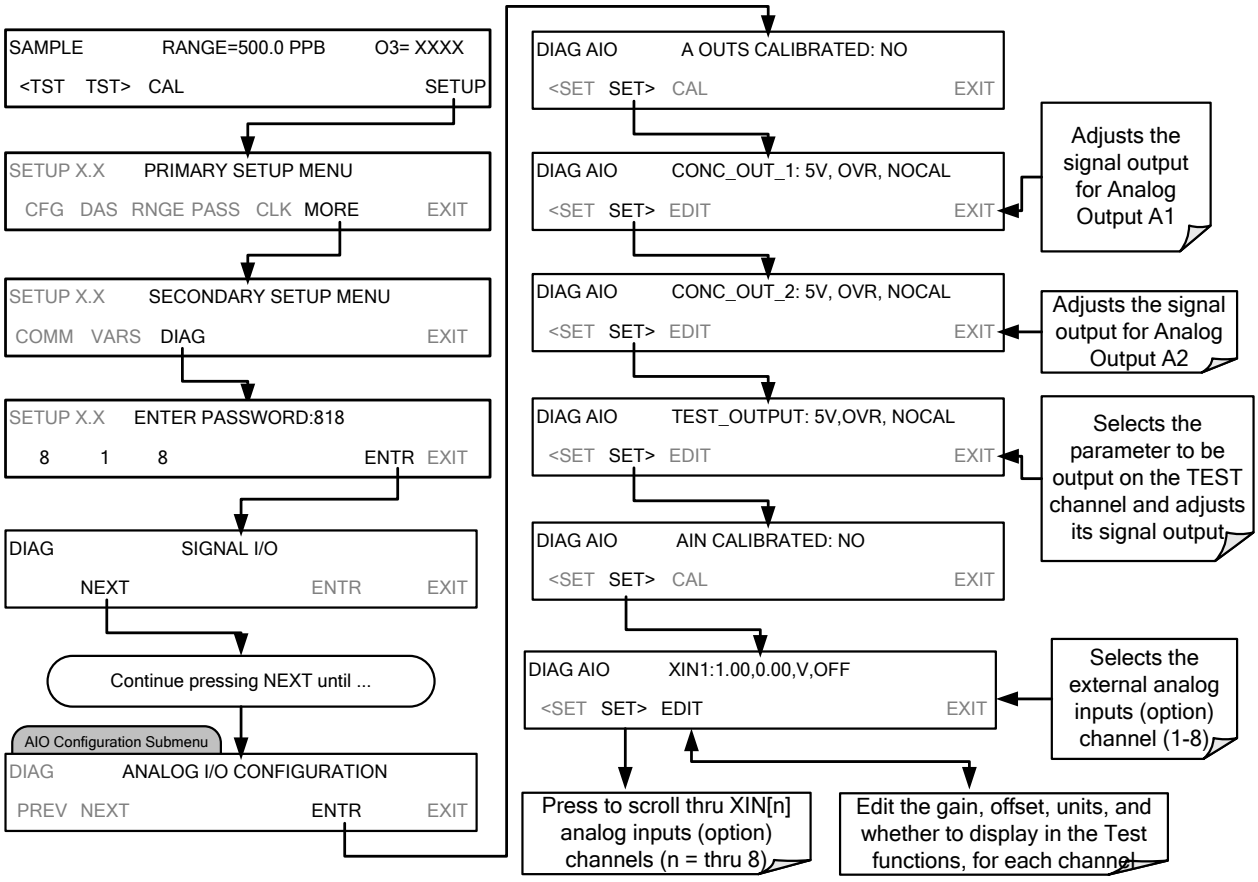

Figure 5-3: Accessing the Analog I/O Configuration Submenus

5.10.1.1. Calibration of the Analog Outputs

TEST CHANNEL calibration needs to be carried out on first startup of the analyzer (performed in the factory as part of the configuration process) or whenever re-calibration is required. The analog outputs can be calibrated automatically or adjusted manually.

In its default mode, the instrument is configured for automatic calibration of all channels, which is useful for clearing any analog calibration warnings associated with channels that will not be used or connected to any input or recording device, e.g., datalogger.

Manual calibration should be used for the 0.1V range or in cases where the outputs must be closely matched to the characteristics of the recording device. Manual calibration requires the AUTOCAL feature to be disabled.

5.10.1.2. Enabling or Disabling the AutoCal for an Individual Analog Output

To enable or disable the **AutoCal** feature for an individual analog output, press.

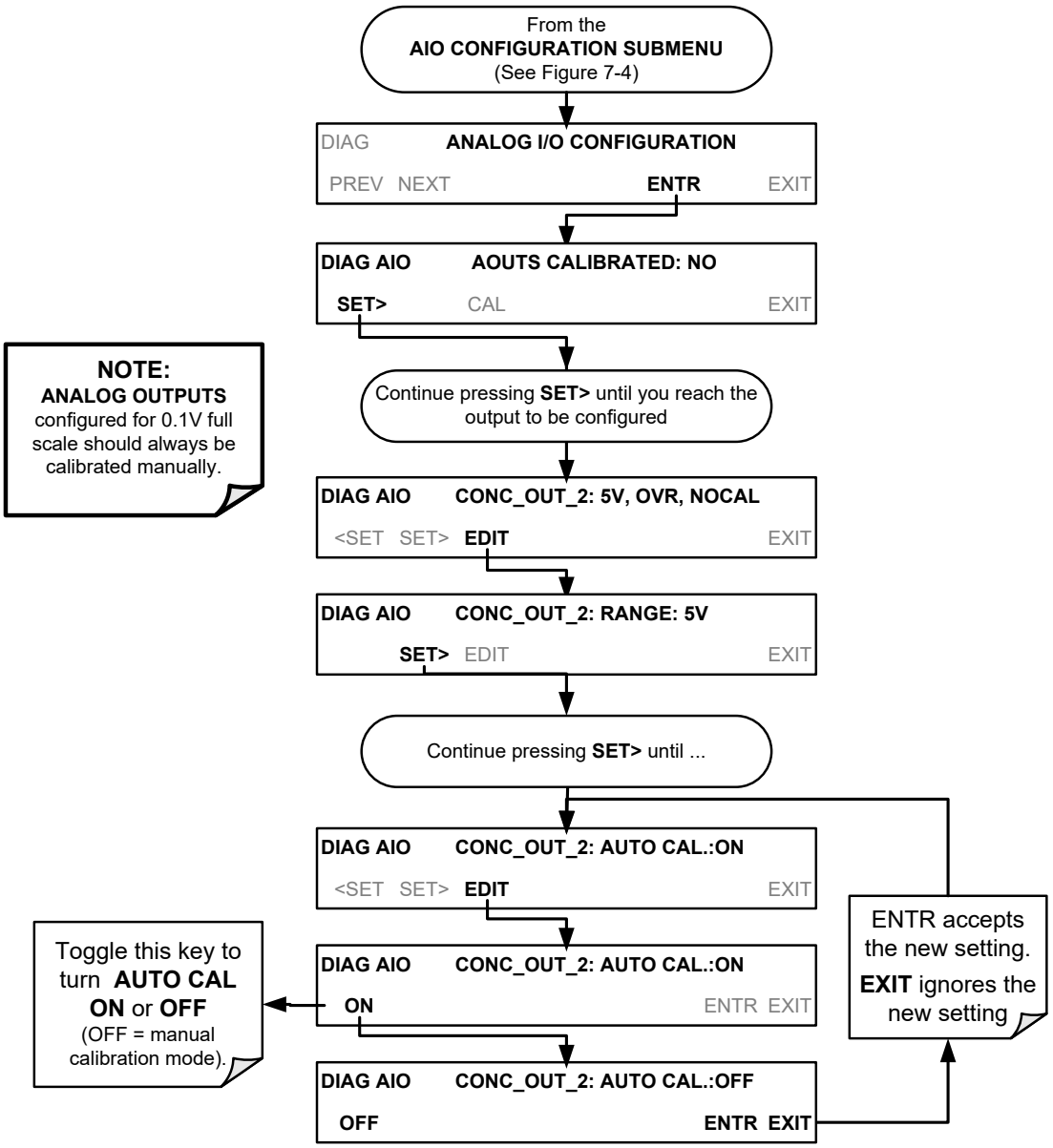
From the
AIO CONFIGURATION SUBMENU
(See Figure 7-4)
DIAG ANALOG I/O CONFIGURATION
PREV NEXT ENTR EXIT
DIAG AIO AOUTS CALIBRATED: NO
SET> CAL EXIT
NOTE:
ANALOG OUTPUTS configured for 0.1V full scale should always be calibrated manually.
Continue pressing SET> until you reach the output to be configured
DIAG AIO CONC_OUT_2: 5V, OVR, NOCAL
<SET SET> EDIT EXIT
DIAG AIO CONC_OUT_2: RANGE: 5V
SET> EDIT EXIT
Continue pressing SET> until ...
DIAG AIO CONC_OUT_2: AUTO CAL.:ON
<SET SET> EDIT EXIT
DIAG AIO CONC_OUT_2: AUTO CAL.:ON
ON ENTR EXIT
Toggle this key to turn AUTO CAL ON or OFF (OFF = manual calibration mode).
DIAG AIO CONC_OUT_2: AUTO CAL.:OFF
OFF ENTR EXIT
ENTR accepts the new setting.
EXIT ignores the new setting

5.10.1.3. **Automatic Group Calibration of the Analog Outputs**

To calibrate the outputs as a group with the **AOUTS CALIBRATION** command, select the **ANALOG I/O CONFIGURATION** submenu (see Figure 5-3) then press:

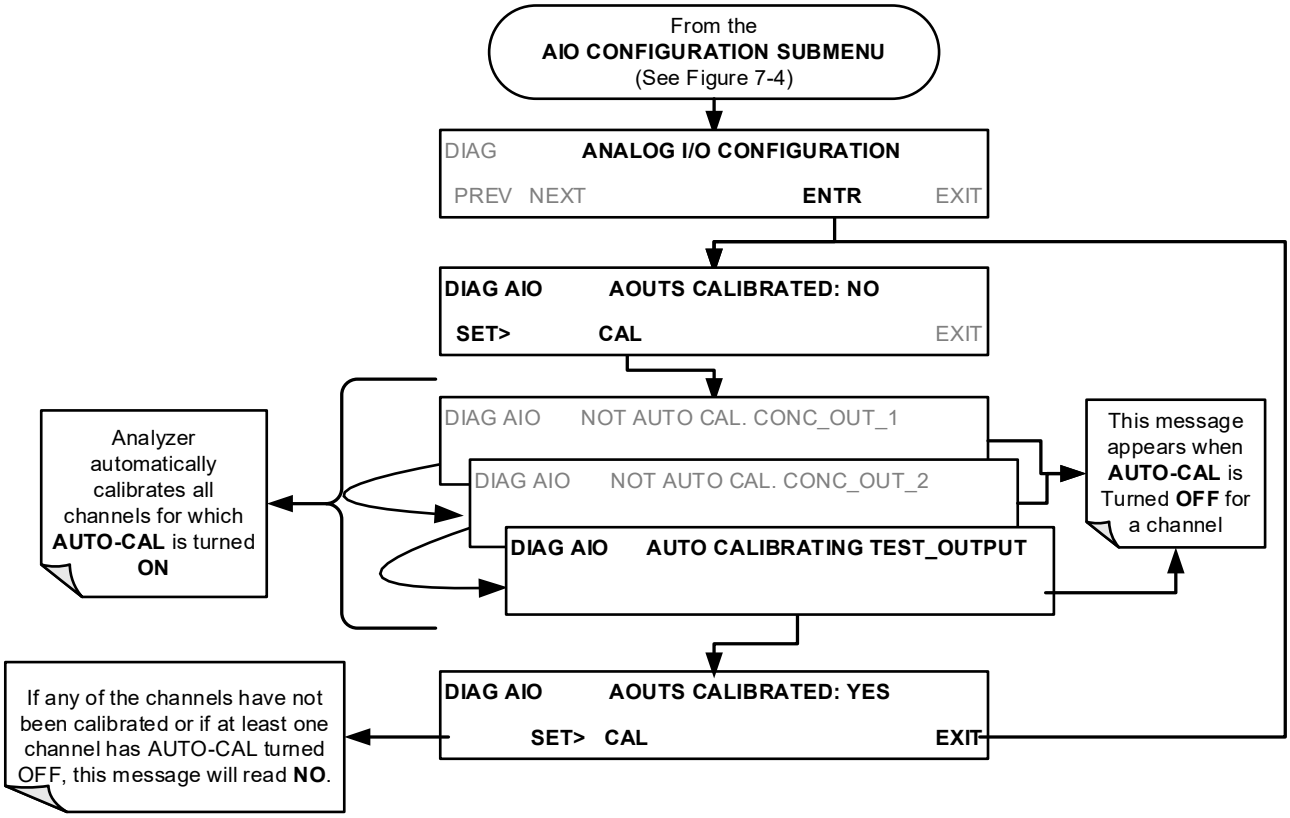

Note **Manual calibration should be used for any analog output set for a 0.1V output range or in cases where the outputs must be closely matched to the characteristics of the recording device.**

To use the **AUTO CAL** feature to initiate an automatic calibration for an individual analog output, select the **ANALOG I/O CONFIGURATION** submenu (see Figure 5-3) then press:

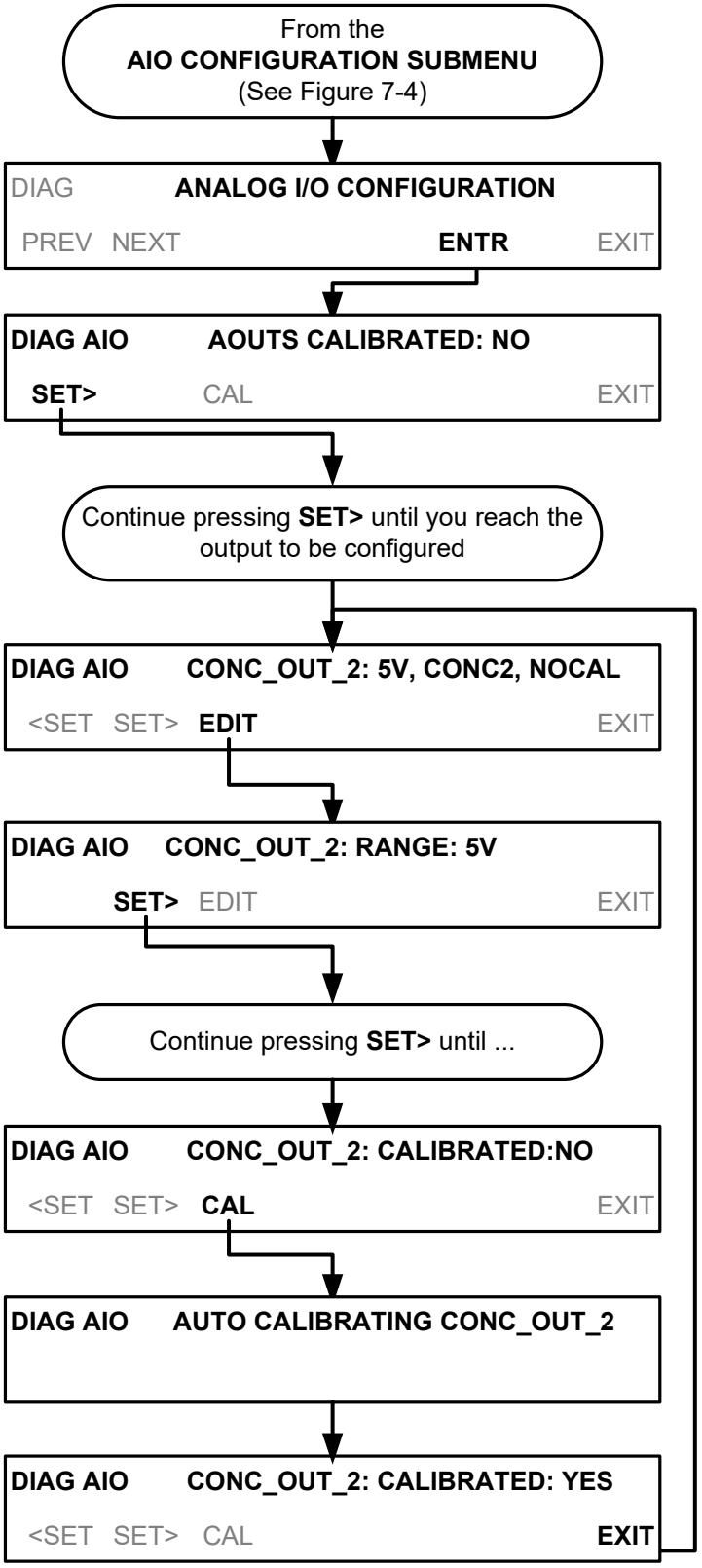

5.10.1.4. **Manual Calibration of the Analog Outputs** Configured for Voltage Ranges

For highest accuracy, the voltages of the analog outputs can be manually calibrated.

Note

The menu for manually adjusting the analog output signal level will only appear if the AUTO-CAL feature is turned off for the channel being adjusted (See Section 5.10.1.2).

Calibrate analog output by connecting a voltmeter across the output terminals and changing the actual output signal level using the front panel buttons in 100, 10 or 1 count increments. See Figure 3-7 for pin assignments and diagram of the analog output connector.

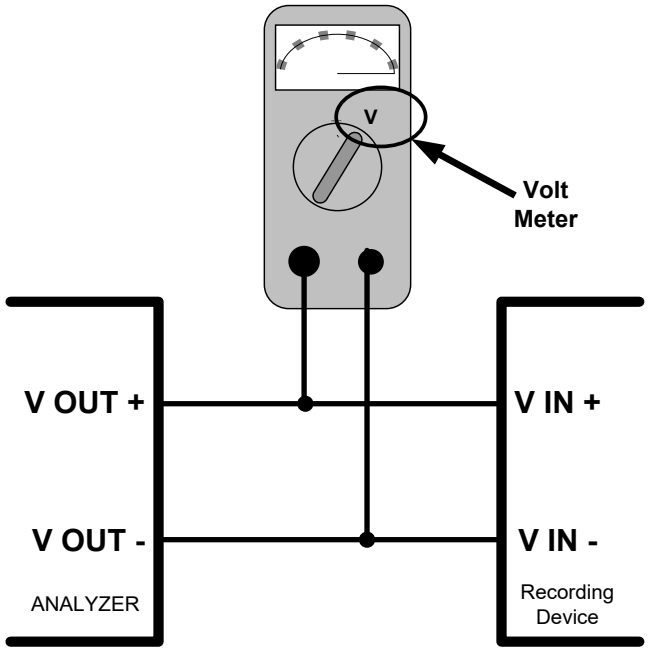

Figure 5-4: Setup for Calibrating Analog Output

Table 5-5: Voltage Tolerances for the TEST CHANNEL Calibration

FULL SCALE	ZERO TOLERANCE	SPAN VOLTAGE	SPAN TOLERANCE	MINIMUM ADJUSTMENT (1 count)
0.1 VDC	±0.0005V	90 mV	±0.001V	0.02 mV
1 VDC	±0.001V	900 mV	±0.001V	0.24 mV
5 VDC	±0.002V	4500 mV	±0.003V	1.22 mV
10 VDC	±0.004V	4500 mV	±0.006V	2.44 mV

To adjust the signal levels of an analog output channel manually, select the **ANALOG I/O CONFIGURATION** submenu (see Figure 5-3) then press:

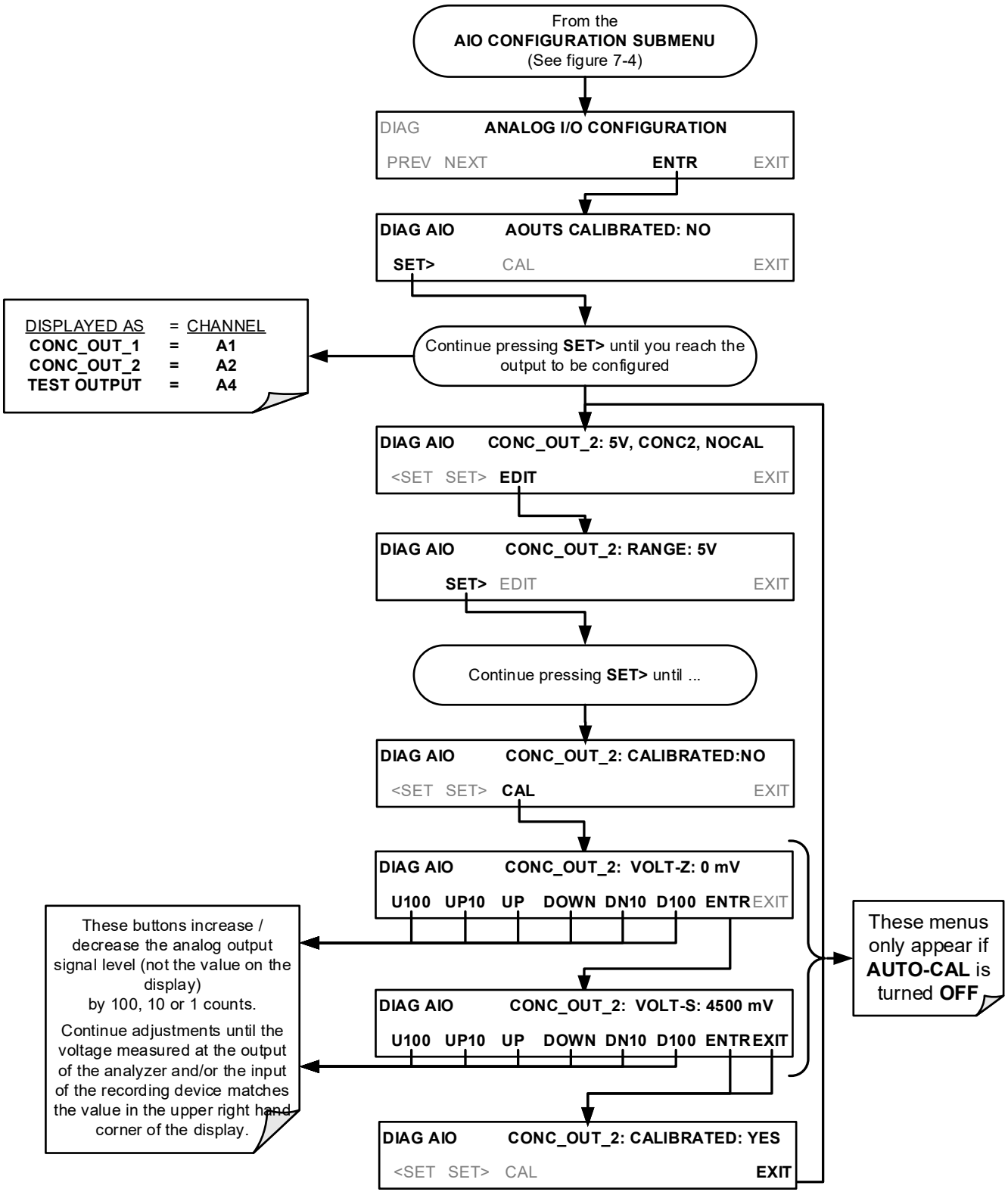
From the
AIO CONFIGURATION SUBMENU
(See figure 7-4)
DIAG ANALOG I/O CONFIGURATION
PREV NEXT ENTR EXIT
DIAG AIO AOUTS CALIBRATED: NO
SET> CAL EXIT
DISPLAYED AS = CHANNEL
CONC_OUT_1 = A1
CONC_OUT_2 = A2
TEST OUTPUT = A4
Continue pressing SET> until you reach the output to be configured
DIAG AIO CONC_OUT_2: 5V, CONC2, NOCAL
<SET SET> EDIT EXIT
DIAG AIO CONC_OUT_2: RANGE: 5V
SET> EDIT EXIT
Continue pressing SET> until ...
DIAG AIO CONC_OUT_2: CALIBRATED:NO
<SET SET> CAL EXIT
DIAG AIO CONC_OUT_2: VOLT-Z: 0 mV
U100 UP10 UP DOWN DN10 D100 ENTR EXIT
These buttons increase / decrease the analog output signal level (not the value on the display) by 100, 10 or 1 counts.
Continue adjustments until the voltage measured at the output of the analyzer and/or the input of the recording device matches the value in the upper right hand corner of the display.
DIAG AIO CONC_OUT_2: VOLT-S: 4500 mV
U100 UP10 UP DOWN DN10 D100 ENTR EXIT
These menus only appear if AUTO-CAL is turned OFF
DIAG AIO CONC_OUT_2: CALIBRATED: YES
<SET SET> CAL EXIT

5.10.1.5. **Manual Adjustment of Current Loop Output Span and Offset**

A current loop option may be purchased for the A1 and A2 Analog outputs of the analyzer. This option places circuitry in series with the output of the D-to A converter on the motherboard that changes the normal DC voltage output to a 0-20 milliamp signal. The outputs can be ordered scaled to any set of limits within that 0-20 mA range, however most current loop applications call for either 0-20 mA or 4-20 mA range spans. All current loop outputs have a + 5% over range. Ranges whose lower limit is set above 1 mA also have a –5 under range.

To switch an analog output from voltage to current loop, follow the instructions in Section 5.10.1.6 and select **CURR** from the list of options on the "Output Range" menu.

Adjust the signal zero and span levels of the current loop output by raising or lowering the voltage output of the D-to-A converter circuitry on the analyzer's motherboard. This raises or lowers the signal level produced by the Current Loop Option circuitry.

The software allows this adjustment to be made in 100, 10 or 1 count increments. Since the exact amount by which the current signal is changed per D-to-A count varies from output-to-output and instrument–to–instrument, you will need to measure the change in the signal levels with a separate, current meter placed in series with the output circuit. See Figure 3-7 for pin assignments and diagram of the analog output connector.

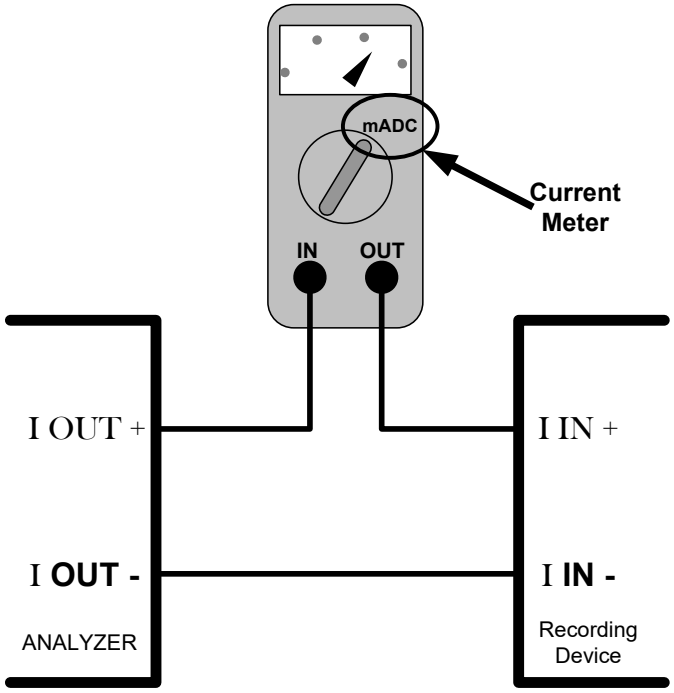

Figure 5-5: Setup for Checking Current Output Signal Levels

CAUTION – General Safety Hazard

Do not exceed 60 V peak voltage between current loop outputs and instrument ground.

To adjust the zero and span signal levels of the current outputs, select the **ANALOG I/O CONFIGURATION** submenu (see Figure 5-3) then press:

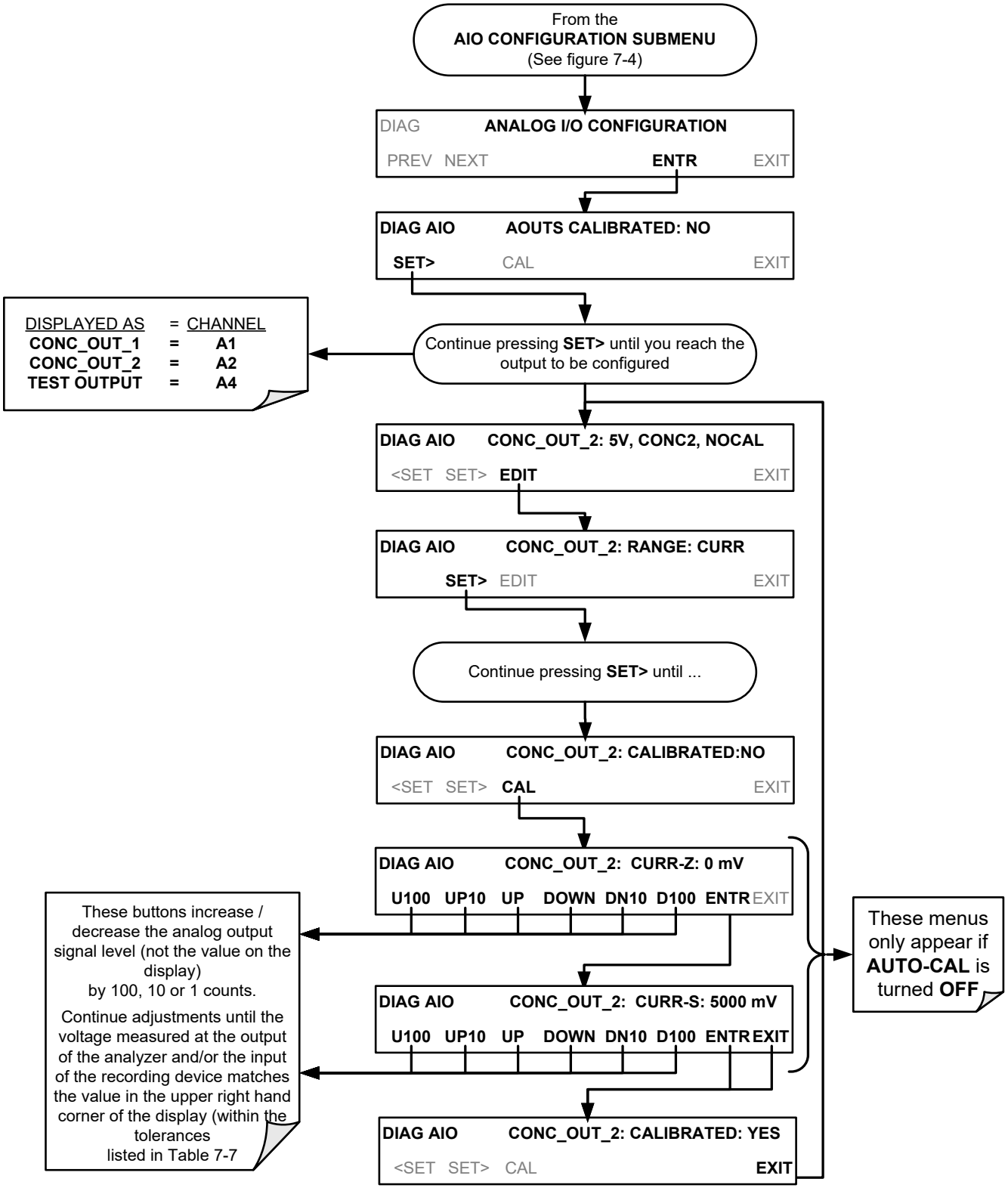

An alternative method for setting up the Current Loop outputs is to connect a 250 ohm ±1% resistor across the current loop output in lieu of the current meter (see Figure 3-7 for

pin assignments and diagram of the analog output connector). Using a voltmeter connected across the resistor follow the procedure above but adjust the output for the following values:

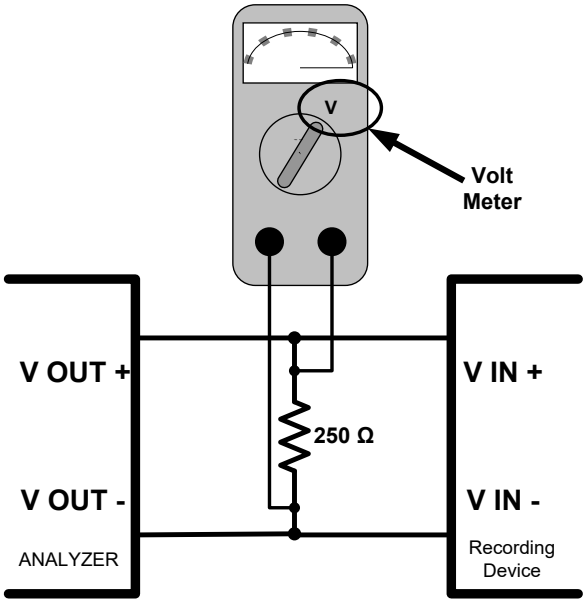

Figure 5-6: Alternative Setup Using 250Ω Resistor for Checking Current Output Signal Levels

Table 5-6: Current Loop Output Check

% FS	Voltage across Resistor for 2-20 mA	Voltage across Resistor for 4-20 mA
0	0.5 VDC	1 VDC
100	5.0	5.0

5.10.1.6. **Analog Output Voltage / Current Range Selection**

In its standard configuration the analog output is set to output a 0 – 5 VDC signals. Several other output ranges are available (see Table 5-7). Each range is usable from -5% to + 5% of the rated span.

Table 5-7: Analog Output Voltage Range Min/Max

RANGE NAME	RANGE SPAN	MINIMUM OUTPUT	MAXIMUM OUTPUT
0.1V	0-100 mVDC	-5 mVDC	105 mVDC
1V	0-1 VDC	-0.05 VDC	1.05 VDC
5V	0-5 VDC	-0.25 VDC	5.25 VDC
10V	0-10 VDC	-0.5 VDC	10.5 VDC
• The default offset for all VDC ranges is 0 VDC.			
CURR	0-20 mA	0 mA	20 mA
• While these are the physical limits of the current loop modules, typical applications use 2-20 or 4-20 mA for the lower and upper limits. Please specify desired range when ordering this option. • The default offset for all current ranges is 0 mA.			

To change the output type and range, select the **ANALOG I/O CONFIGURATION** submenu (see Figure 5-3) then press,

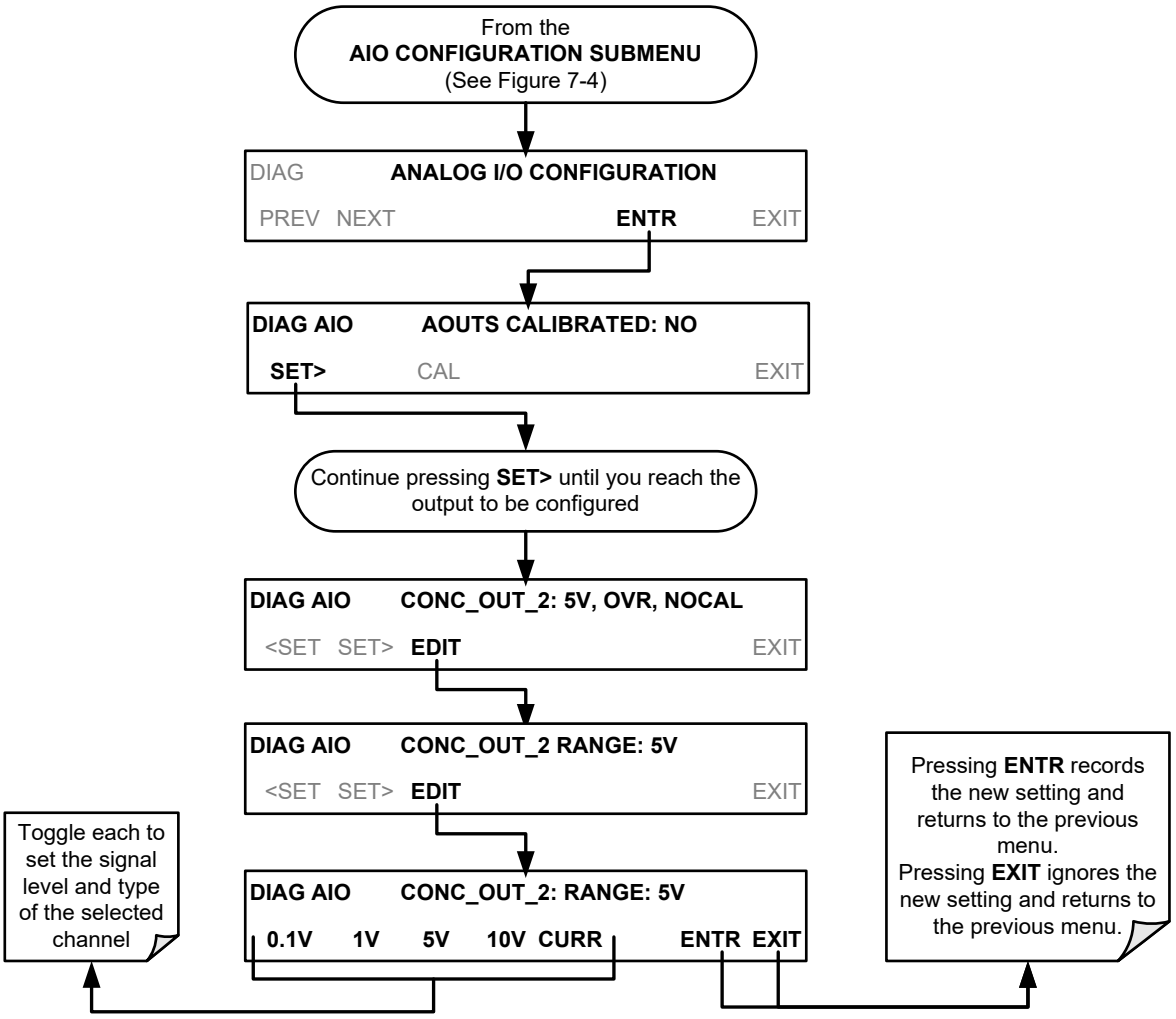

5.10.1.7. **Turning an Analog Output Over-Range Feature ON/OFF**

In its default configuration, a ± 5% over-range is available on each of the T400's analog outputs. This over-range can be disabled if your recording device is sensitive to excess voltage or current.

To turn the over-range feature on or off, select the **ANALOG I/O CONFIGURATION** submenu (see Figure 5-3) then press

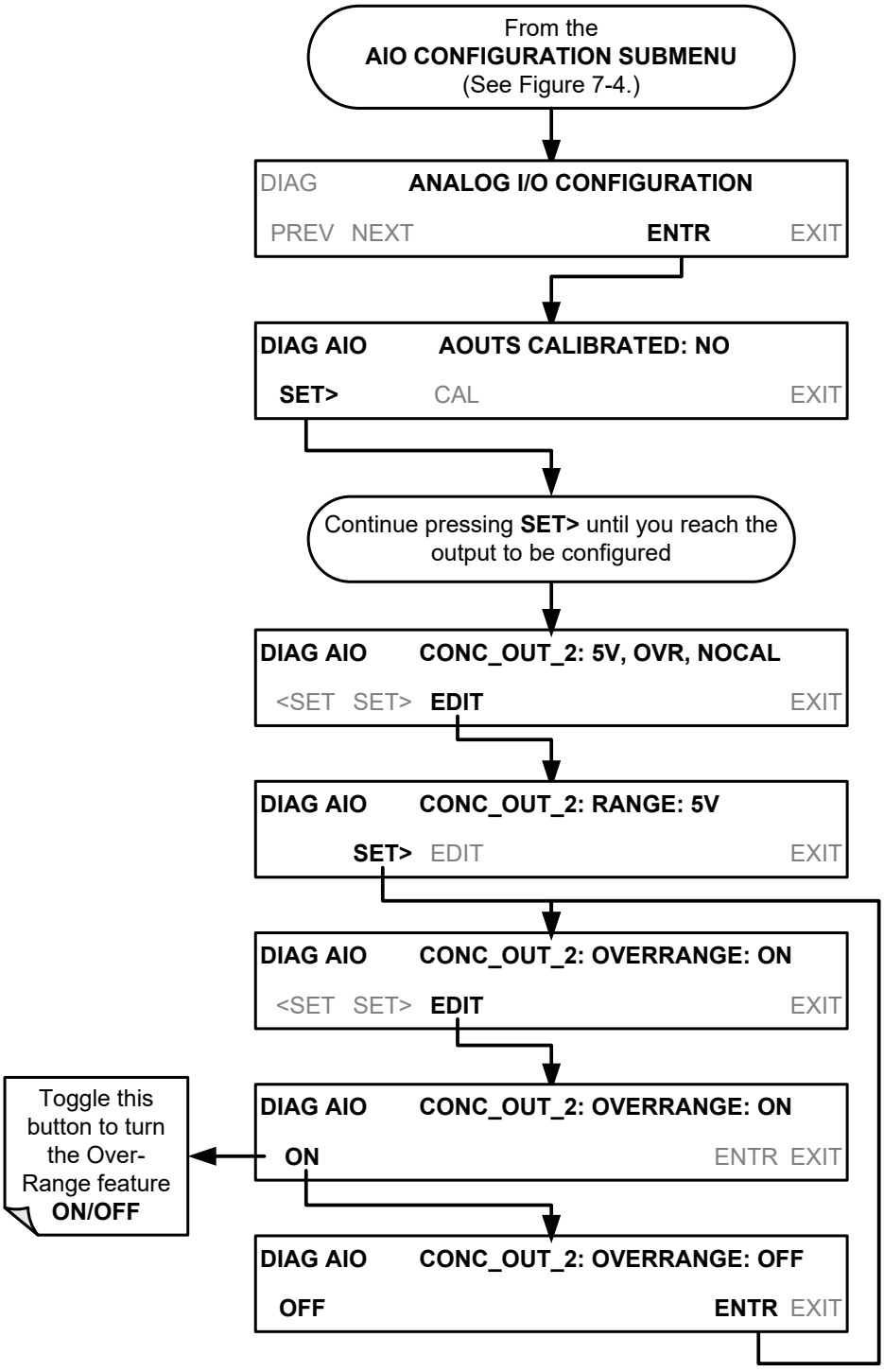

5.10.1.8. **Adding a Recorder Offset to an Analog Output**

Some analog signal recorders require that the zero signal be significantly different from the baseline of the recorder in order to record slightly negative readings caused by noise around the zero point. This can be achieved in the T400 by defining a zero offset, a small voltage (e.g., 10% of span).

To add a zero offset to a specific analog output channel, select the **ANALOG I/O CONFIGURATION** submenu (see Figure 5-3) then press:

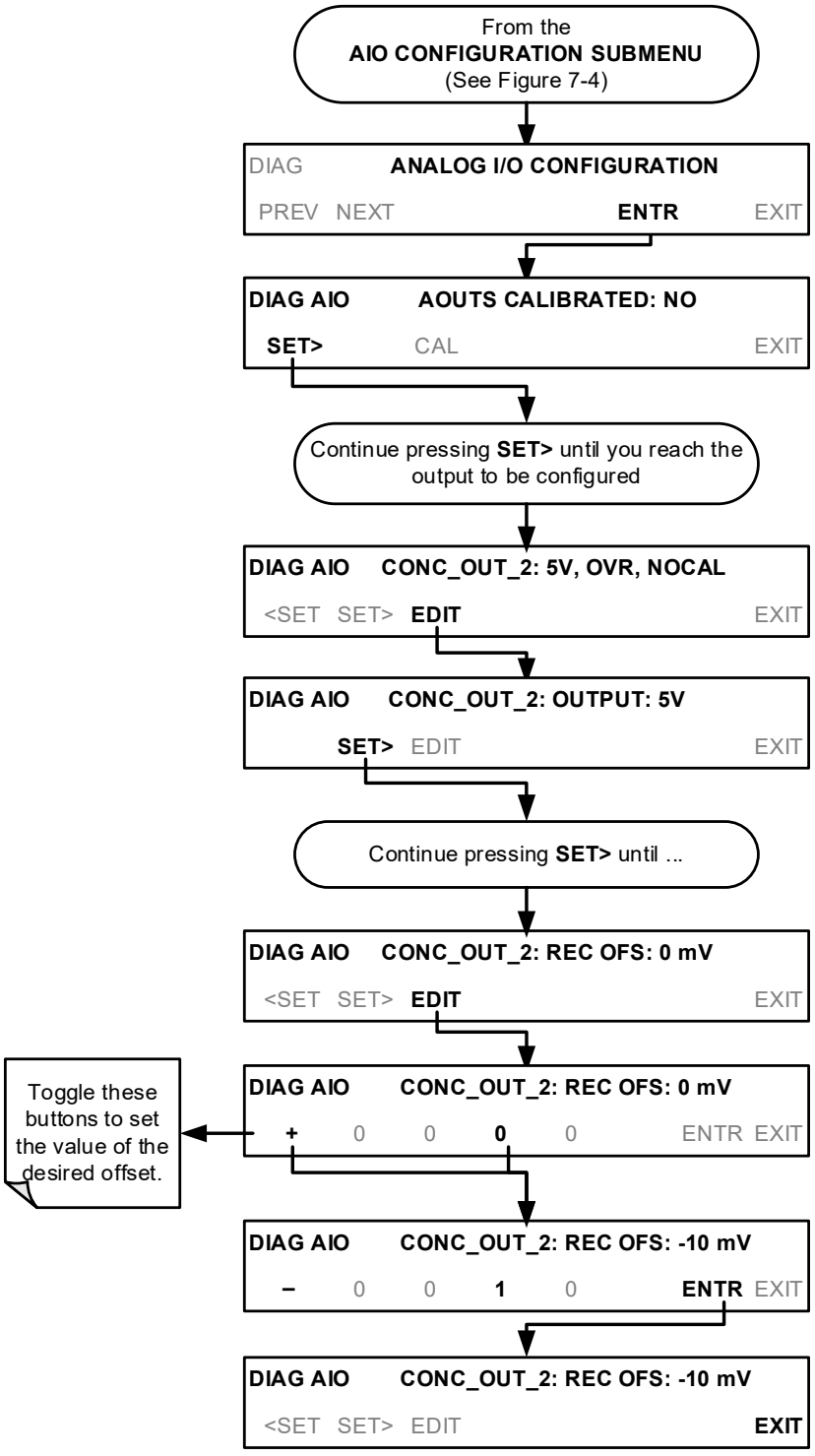

5.10.1.9. **Selecting a Test Channel Function for Output A4**

The test functions available to be reported are:

Table 5-8: Test Channel Functions Available on the T400's Analog Output

TEST CHANNEL	DESCRIPTION	ZERO	FULL SCALE
NONE	**TEST CHANNEL IS TURNED OFF**		
PHOTO MEAS	The raw output of the photometer during its measure cycle	0 mV	5000 mV*
PHOTO REF	The raw output of the photometer during its reference cycle	0 mV	5000 mV*
O_3 GEN REF	The raw output of the O_3 generator's reference detector	0 mV	5000 mV*
SAMPLE PRESSURE	The pressure of gas in the photometer absorption tube	0 In-Hg-A	40 In-Hg-A
SAMPLE FLOW	The gas flow rate through the photometer	0 cm^3/min	1000 cm^3/min
SAMPLE TEMP	The temperature of gas in the photometer absorption tube	0 °C	70 °C
PHOTO LAMP TEMP	The temperature of the photometer UV lamp	0 °C	70 °C
O_3 SCRUB TEMP	The temperature of the optional Metal Wool Scrubber.	0 °C	70 °C
O_3 LAMP TEMP	The temperature of the IZS Option's O_3 generator UV lamp	0 mV	5000 mV
CHASSIS TEMP	The temperature inside the T400's chassis (same as **BOX TEMP**)	0 °C	70 °C

Once a function is selected, the instrument not only begins to output a signal on the analog output, but also adds **TEST** to the list of test functions viewable via the front panel display.

To activate the **TEST** Channel and select a function, press:

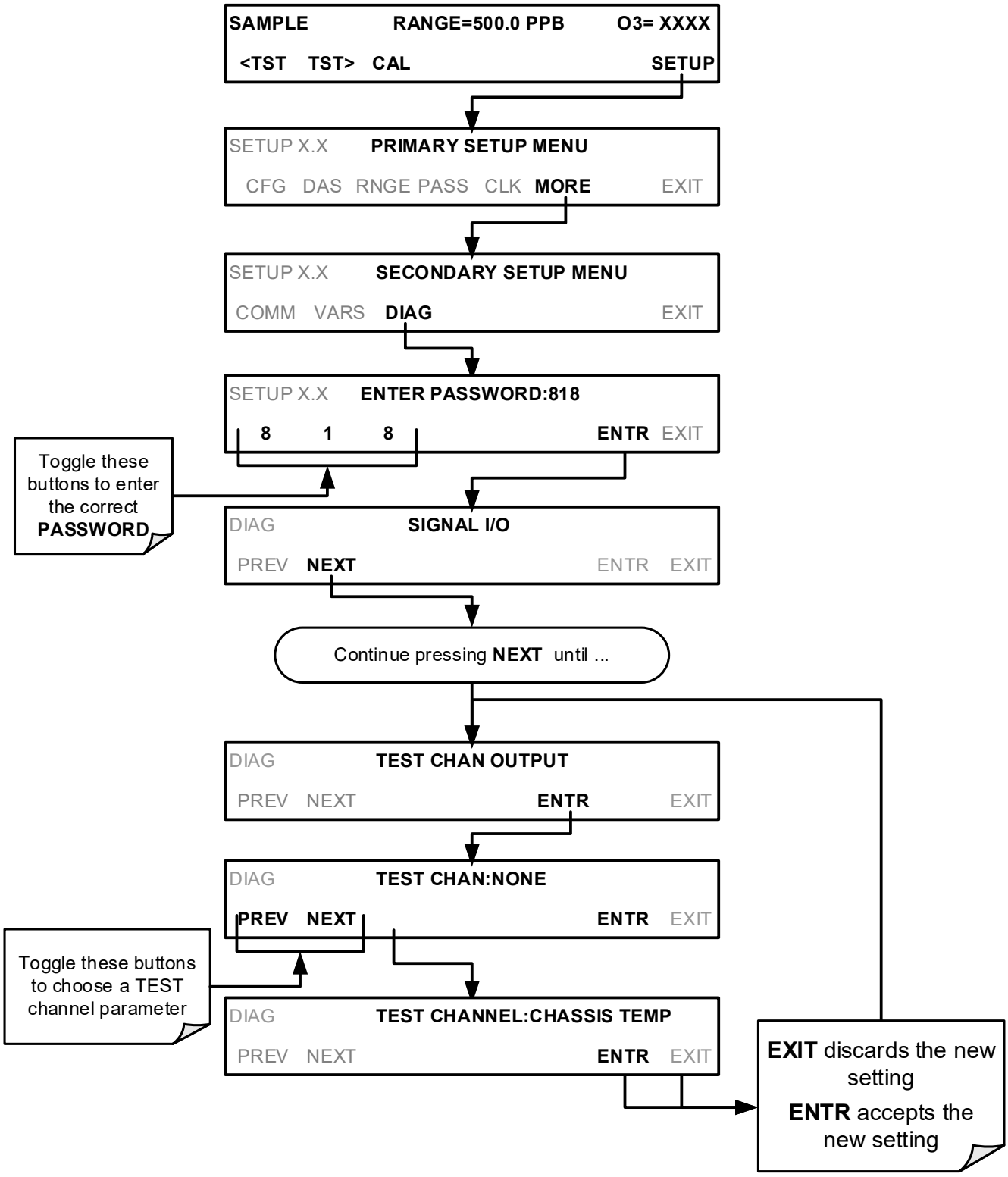

5.10.2. **ANALOG INPUT (AIN) CALIBRATION**

AIN calibration should only be necessary after major repair such as a replacement of CPU, motherboard or power supplies.

To perform an analog input calibration, select the **ANALOG I/O CONFIGURATION** submenu (see Figure 5-3) then press:

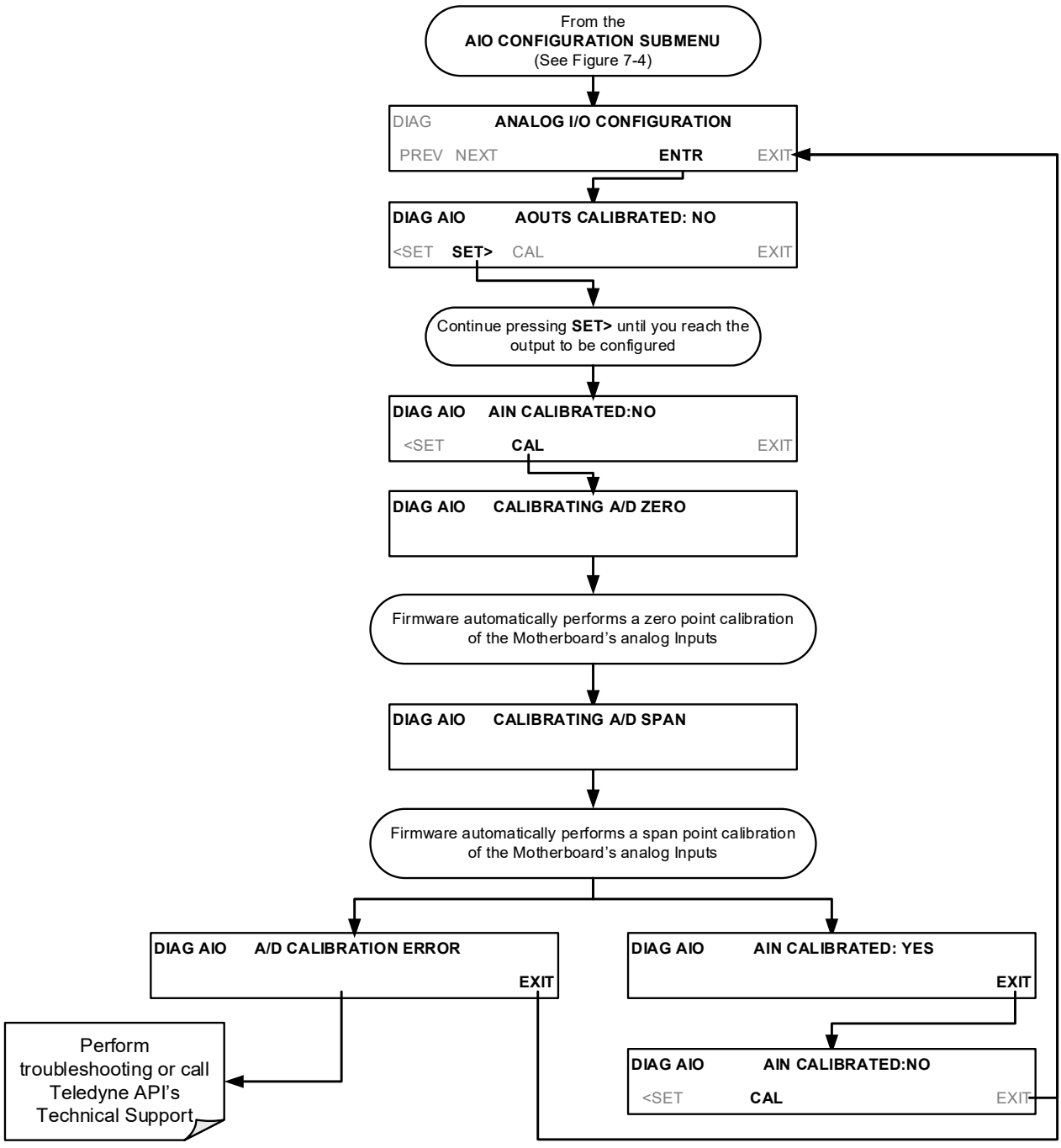

5.10.3. CONFIGURING ANALOG INPUTS (OPTION)

To configure the analyzer's external analog inputs option, define for each channel**:**

- gain (number of units represented by 1 volt)
- offset (volts)
- engineering units to be represented in volts (each press of the touchscreen button scrolls the list of alphanumeric characters from A-Z and 0-9)
- whether to display the channel in the Test functions

To access and adjust settings for the Analog Inputs option channels press:

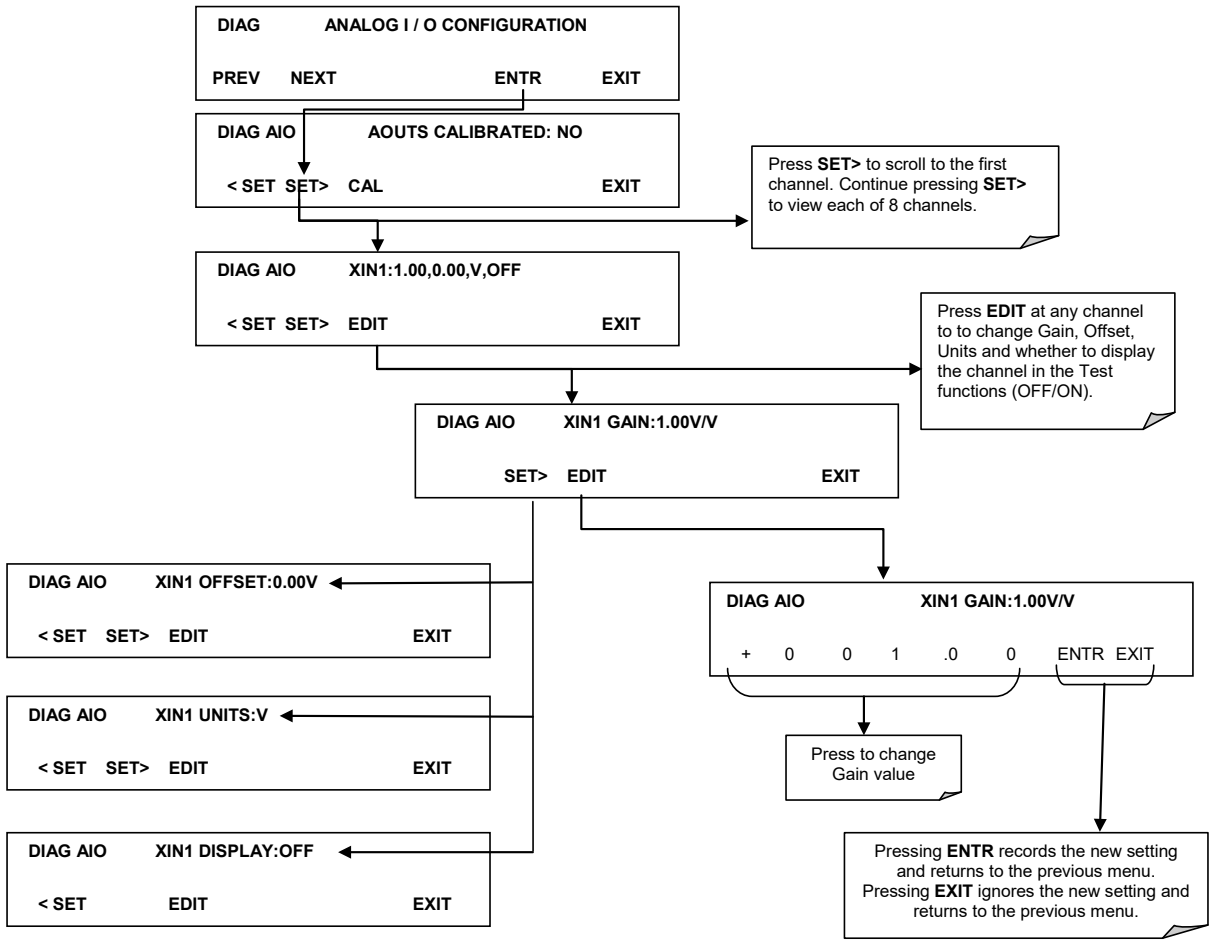

Figure 5-7. DIAG – Analog Inputs (Option) Configuration Menu

6. COMMUNICATIONS SETUP AND OPERATION

The T400 is equipped with an Ethernet port, a USB port and two serial communication ports accessible via two DB-9 connectors on the rear panel of the instrument. The COM1 connector is a male DB-9 connector and the COM2 is a female DB9 connector.

Both the RS-232 and the COM2 ports operate similarly and give the user the ability to communicate with, issue commands to, and receive data from the analyzer through an external computer system or terminal.

- The RS-232 port (used as COM1) can also be configured to operate in single or RS-232 multidrop mode (option 62; see Sections 3.3.1.8 and 6.3).
- The COM2 port can be configured for standard RS-232 operation or half-duplex RS-485 communication (see Sections 3.3.1.8, 6.3, and 6.4). Either of these configurations disable use of the USB comm port.

6.1. DATA TERMINAL/COMMUNICATION EQUIPMENT (DTE DCE)

RS-232 was developed for allowing communications between data terminal equipment (DTE) and data communication equipment (DCE). Basic data terminals always fall into the DTE category, whereas modems are always considered DCE devices.

Electronically, the difference between the DCE and DTE is the pin assignment of the Data Receive and Data Transmit functions.

- DTE devices receive data on pin 2 and transmit data on pin 3.
- DCE devices receive data on pin 3 and transmit data on pin 2.

A switch located below the serial ports on the rear panel allows the user to switch between DTE (for use with data terminals) or DCE (for use with modems). Since computers can be either DTE or DCE, check your computer to determine which mode to use.

6.2. COMMUNICATION MODES, BAUD RATE AND PORT TESTING

Use the SETUP>MORE>COMM menu to configure COM1 (labeled **RS232** on instrument rear panel) and/or COM2 (labeled **COM2** on instrument rear panel) for communication modes, baud rate and/or port testing for correct connection. If using a USB option communication connection, setup requires configuring the COM2 baud rate (Section 6.2.2) to match the computer to which the connection is made.

6.2.1. COMMUNICATION MODES

Each of the analyzer's serial ports can be configured to operate in a number of different modes, listed in Table 6-1. As modes are selected, the analyzer sums the mode ID numbers and displays this combined number on the front panel display. For example, if quiet mode (01), computer mode (02) and Multi-Drop-Enabled mode (32) are selected, the analyzer would display a combined **MODE ID** of **35**.

Table 6-1: COMM Port Communication Modes

MODE[1]	ID	DESCRIPTION
QUIET	**1**	Quiet mode suppresses any feedback from the analyzer (such as warning messages) to the remote device and is typically used when the port is communicating with a computer program where such intermittent messages might cause communication problems. Such feedback is still available, but a command must be issued to receive them.
COMPUTER	**2**	Computer mode inhibits echoing of typed characters and is used when the port is communicating with a computer operated control program.
SECURITY	**4**	When enabled, the serial port requires a password before it will respond. The only command that is active is the help screen (? CR).
E, 7, 1	**2048**	When turned on, this mode switches the **COM** port settings from No parity; 8 data bits; 1 stop bit to Even parity; 7 data bits; 1 stop bit
RS-485	**1024**	Configures the **COM2** Port for RS-485 communication. RS-485 mode has precedence over multidrop mode if both are enabled.
MULTIDROP PROTOCOL	**32**	Multidrop protocol allows a multi-instrument configuration on a single communications channel. Multidrop requires the use of unique instrument IDs.
ENABLE MODEM	**64**	Enables sending a modem initialization string at power-up. Asserts certain lines in the RS-232 port to enable the modem to communicate.
ERROR CHECKING[2]	**128**	Fixes certain types of parity errors at certain Hessen protocol installations.
XON/XOFF HANDSHAKE[2]	**256**	Disables XON/XOFF data flow control also known as software handshaking.
HARDWARE HANDSHAKE	**8**	Enables CTS/RTS style hardwired transmission handshaking. This style of data transmission handshaking is commonly used with modems or terminal emulation protocols as well as by Teledyne API's APICOM software.
HARDWARE FIFO[2]	**512**	Disables the **HARDWARE FIFO** (First In – First Out), When FIFO is enabled it improves data transfer rate for that COM port.
COMMAND PROMPT	**4096**	Enables a command prompt when in terminal mode.

[1] Modes are listed in the order in which they appear in the **SETUP → MORE → COMM → COM[1 OR 2] → MODE** menu

[2] The default setting for this feature is **ON.** Do not disable unless instructed to by Teledyne API Technical Support personnel.

Note **Communication Modes for each COM port must be configured independently.**

Press the following buttons to select communication modes for a one of the COMM ports, such as the following example where **RS-485** mode is enabled:

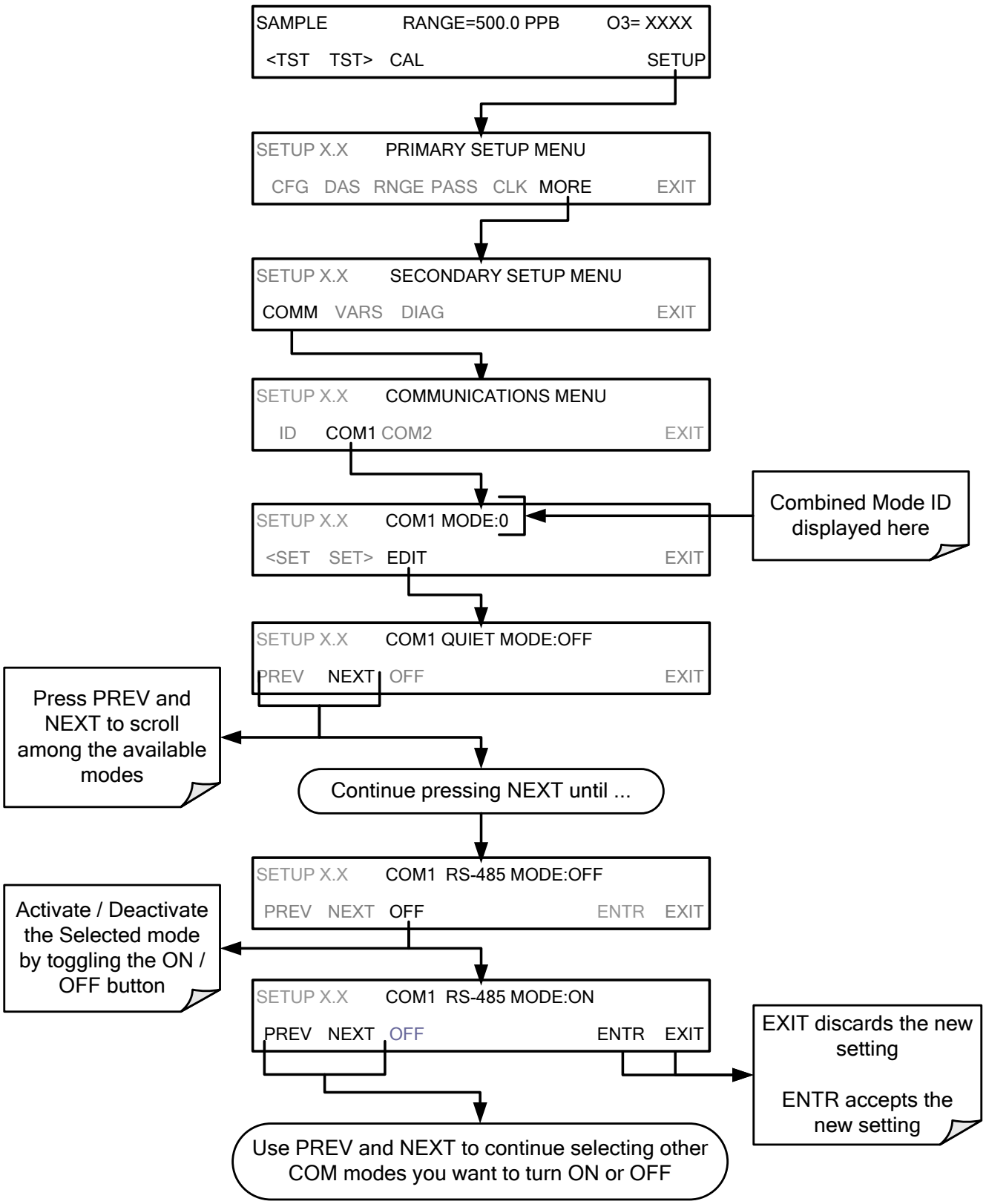
SAMPLE RANGE=500.0 PPB O3= XXXX
<TST TST> CAL SETUP
SETUP X.X PRIMARY SETUP MENU
CFG DAS RNGE PASS CLK MORE EXIT
SETUP X.X SECONDARY SETUP MENU
COMM VARS DIAG EXIT
SETUP X.X COMMUNICATIONS MENU
ID COM1 COM2 EXIT
SETUP X.X COM1 MODE:0
<SET SET> EDIT EXIT
Combined Mode ID displayed here
SETUP X.X COM1 QUIET MODE:OFF
PREV NEXT OFF EXIT
Press PREV and NEXT to scroll among the available modes
Continue pressing NEXT until ...
SETUP X.X COM1 RS-485 MODE:OFF
PREV NEXT OFF ENTR EXIT
Activate / Deactivate the Selected mode by toggling the ON / OFF button
SETUP X.X COM1 RS-485 MODE:ON
PREV NEXT OFF ENTR EXIT
EXIT discards the new setting
ENTR accepts the new setting
Use PREV and NEXT to continue selecting other COM modes you want to turn ON or OFF

6.2.2. **COM PORT BAUD RATE**

To select the baud rate of either one of the COM Ports, press:

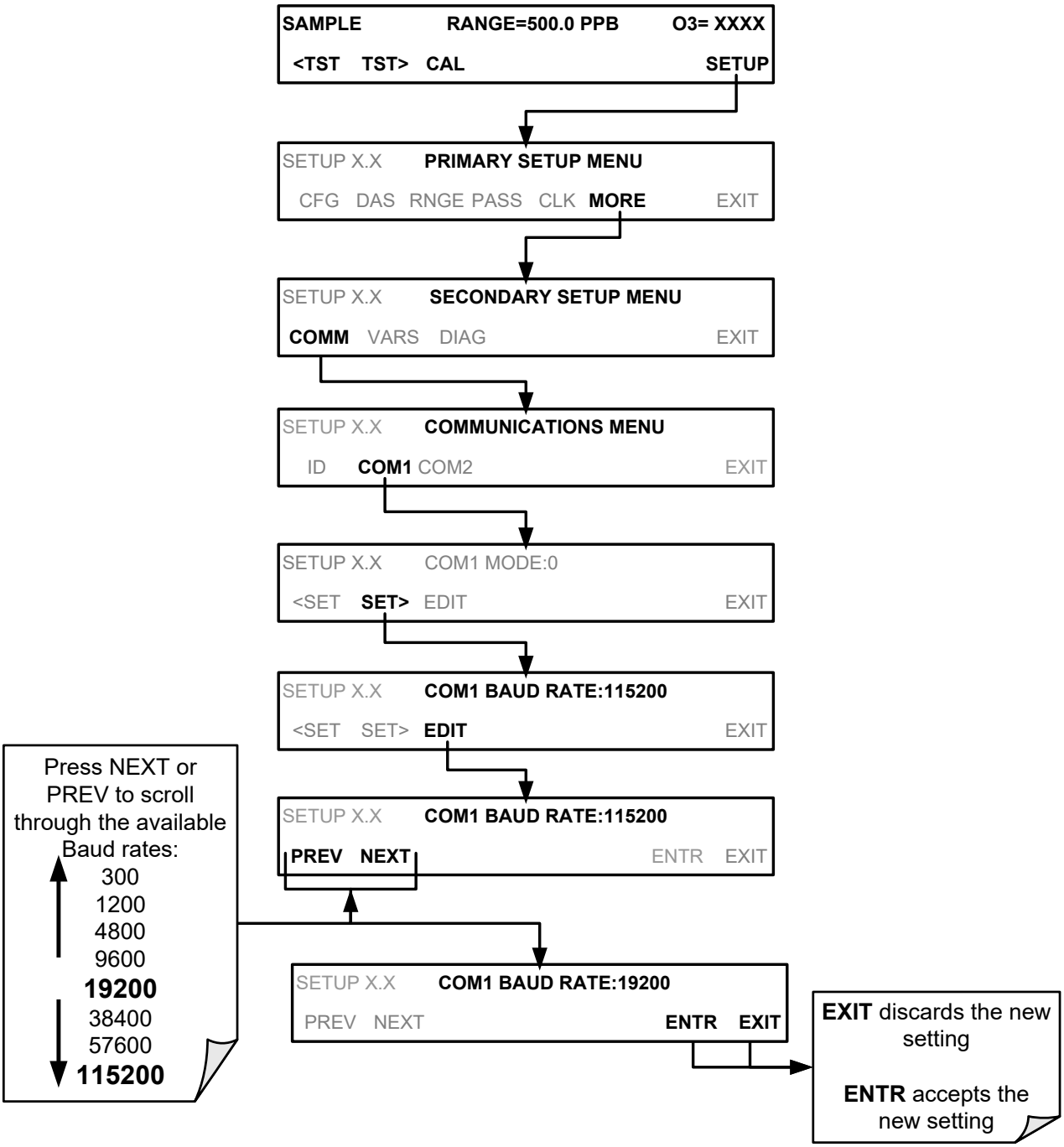

6.2.3. **COM PORT TESTING**

The serial ports can be tested for correct connection and output in the **COM** menu. This test sends a string of 256 'w' characters to the selected COMM port. While the test is running, the red LED on the rear panel of the analyzer should flicker.

To initiate the test press the following button sequence.

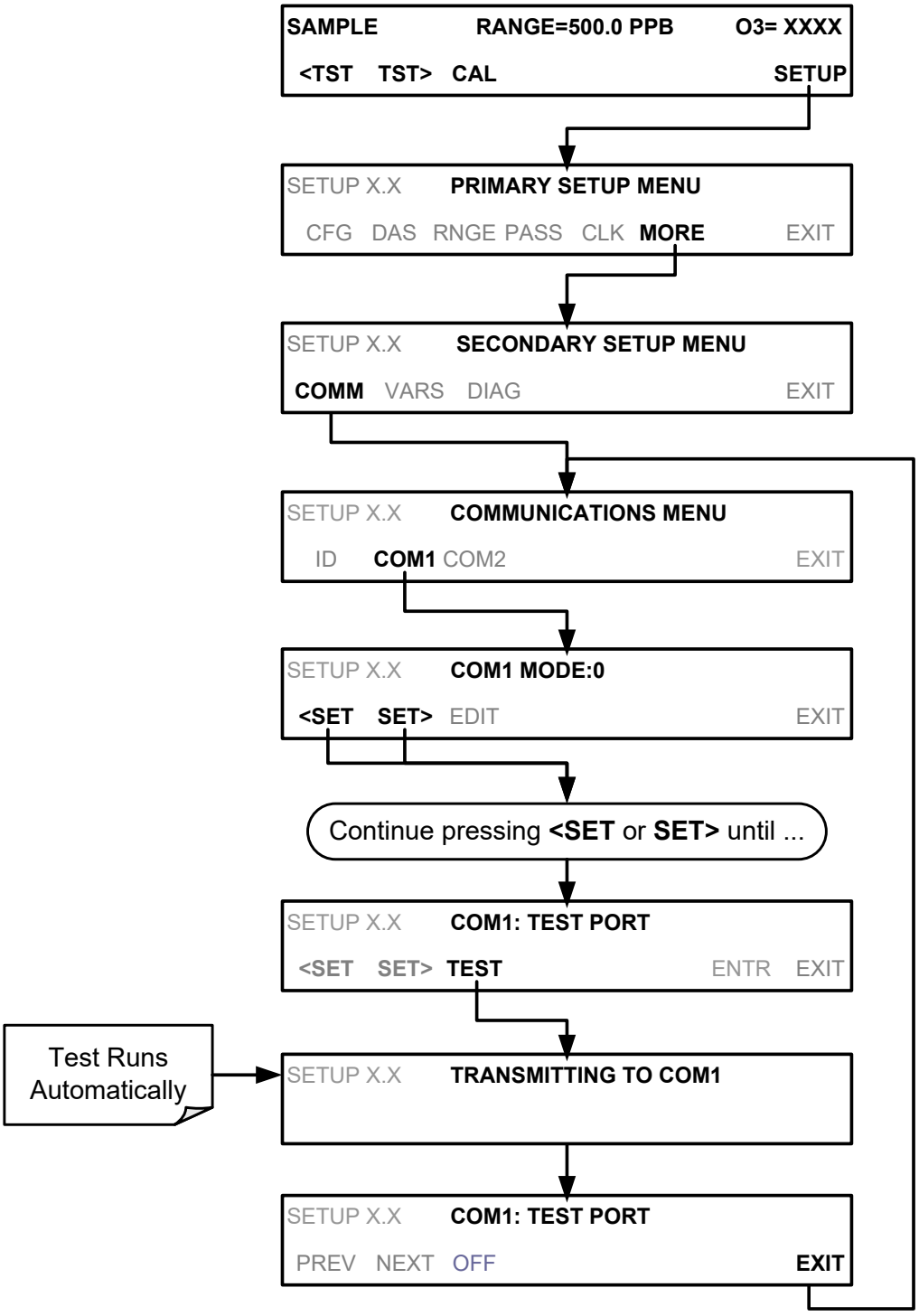

6.3. **RS-232**

The **RS232** and **COM2** communications (COMM) ports operate on the RS-232 protocol (default configuration). Possible configurations for these two COMM ports are summarized as follows:

- **RS232** port can also be configured to operate in single or RS-232 Multidrop mode (Option 62)
- **COM2** port can be left in its default configuration for standard RS-232 operation including multidrop, or it can be reconfigured for half-duplex RS-485 operation (please contact the factory for this configuration).

Note that when the rear panel **COM2** port is in use, except for multidrop communication, the rear panel USB port cannot be used. Alternatively, when the USB port is enabled, **COM2** port cannot be used except for multidrop.

A code-activated switch (CAS) can also be used on either port to connect typically between 2 and 16 send/receive instruments (host computer, printers, data loggers, analyzers, monitors, calibrators, etc.) into one communications hub. Contact Teledyne API Sales for more information on CAS systems.

To configure the analyzer's communication ports, use the SETUP>MORE>COMM menu.

6.4. **RS-485 (OPTION)**

As delivered from the factory, **COM2** is configured for RS-232 communications. This port can be reconfigured for operation as a non-isolated, half-duplex RS-485 port. To configure RS-485, please contact the factory.

6.5. **ETHERNET**

When using the Ethernet interface, the analyzer can be connected to any standard 10BaseT or 100BaseT Ethernet network via low-cost network hubs, switches or routers. The interface operates as a standard TCP/IP device on port 3000. This allows a remote computer to connect through the network to the analyzer using APICOM, terminal emulators or other programs.

The Ethernet connector has two LEDs that are on the connector itself, indicating its current operating status.

Table 6-2: Ethernet Status Indicators

LED	FUNCTION
amber (link)	On when connection to the LAN is valid.
green (activity	Flickers during any activity on the LAN.

The analyzer is shipped with DHCP enabled by default. This allows the instrument to be connected to a network or router with a DHCP server. The instrument will automatically be assigned an IP address by the DHCP server (Section 6.5.1). This configuration is useful for quickly getting an instrument up and running on a network. However, for permanent Ethernet connections, a static IP address should be used. Section 6.5.1 below details how to configure the instrument with a static IP address.

6.5.1. CONFIGURING ETHERNET COMMUNICATION MANUALLY (STATIC IP ADDRESS)

To configure Ethernet communication manually:

1. Connect a cable from the analyzer's Ethernet port to a Local Area Network (LAN) or Internet port.
2. From the analyzer's front panel touchscreen, access the Communications Menu as shown below, turning DHCP mode to OFF.

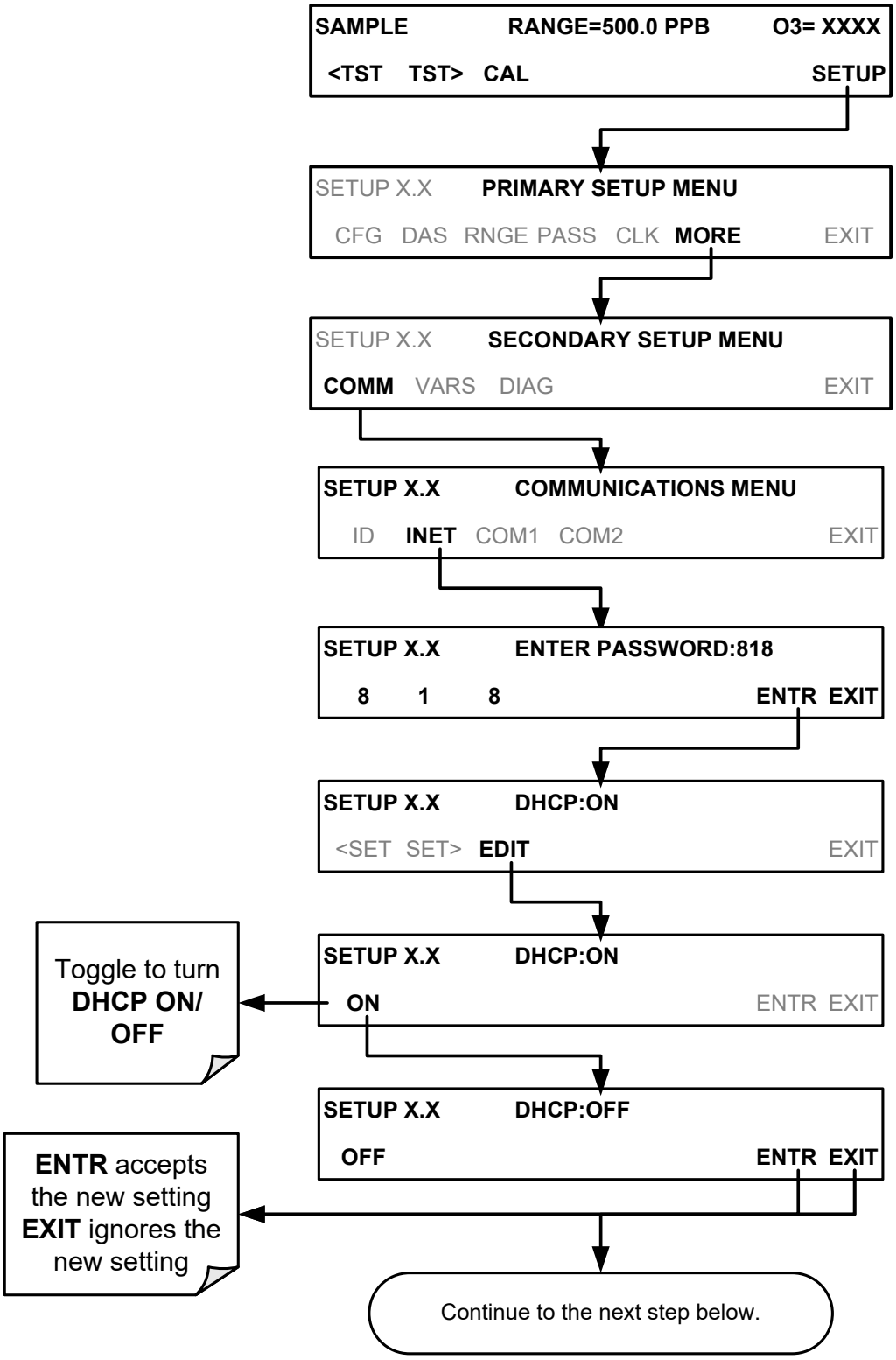
SAMPLE RANGE=500.0 PPB O3= XXXX
<TST TST> CAL SETUP
SETUP X.X PRIMARY SETUP MENU
CFG DAS RNGE PASS CLK MORE EXIT
SETUP X.X SECONDARY SETUP MENU
COMM VARS DIAG EXIT
SETUP X.X COMMUNICATIONS MENU
ID INET COM1 COM2 EXIT
SETUP X.X ENTER PASSWORD:818
8 1 8 ENTR EXIT
SETUP X.X DHCP:ON
<SET SET> EDIT EXIT
SETUP X.X DHCP:ON
ON ENTR EXIT
Toggle to turn DHCP ON/ OFF
SETUP X.X DHCP:OFF
OFF ENTR EXIT
ENTR accepts the new setting EXIT ignores the new setting
Continue to the next step below.

Next, refer to Table 6-3 for the default Ethernet configuration settings and configure the **INSTRUMENT IP**, **GATEWAY IP** and **SUBNET MASK** addresses by pressing:

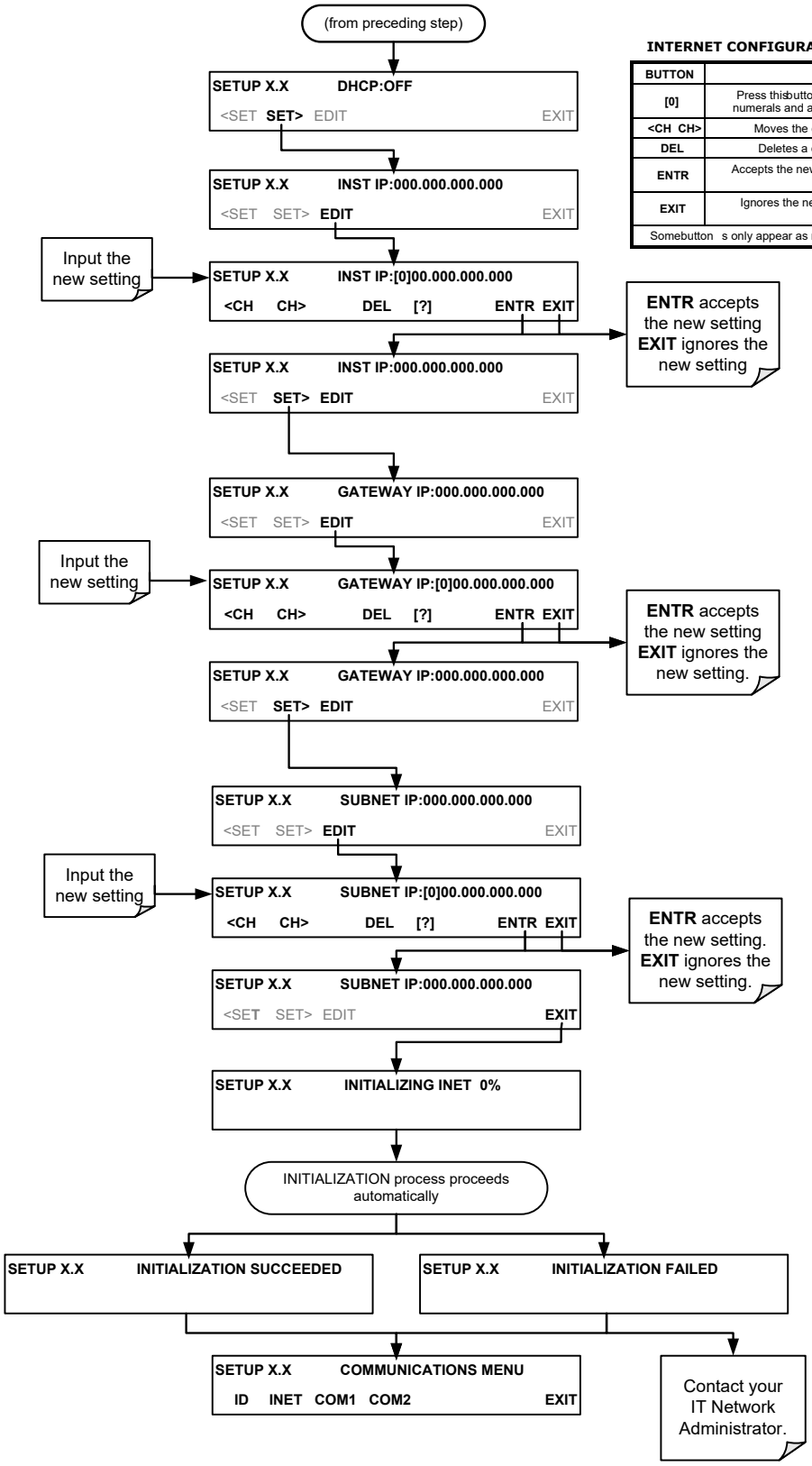

INTERNET CONFIGURATION BUTTON FUNCTIONS

BUTTON	FUNCTION
[0]	Press this button to cycle through the range of numerals and available characters 0 (" – 9" & " . ")
<CH CH>	Moves the cursor one character left or right.
DEL	Deletes a character at the cursor location.
ENTR	Accepts the new setting and returns to the previous menu.
EXIT	Ignores the new setting and returns to the previous menu.
Some buttons only appear as needed.	

6.5.2. CONFIGURING ETHERNET COMMUNICATION WITH DYNAMIC HOST CONFIGURATION PROTOCOL (DHCP)

1. Consult with your network administrator to affirm that your network server is running DHCP.
2. Access the Ethernet Menu (SETUP>MORE>COMM>INET).
3. Follow the setup sequence as follows:

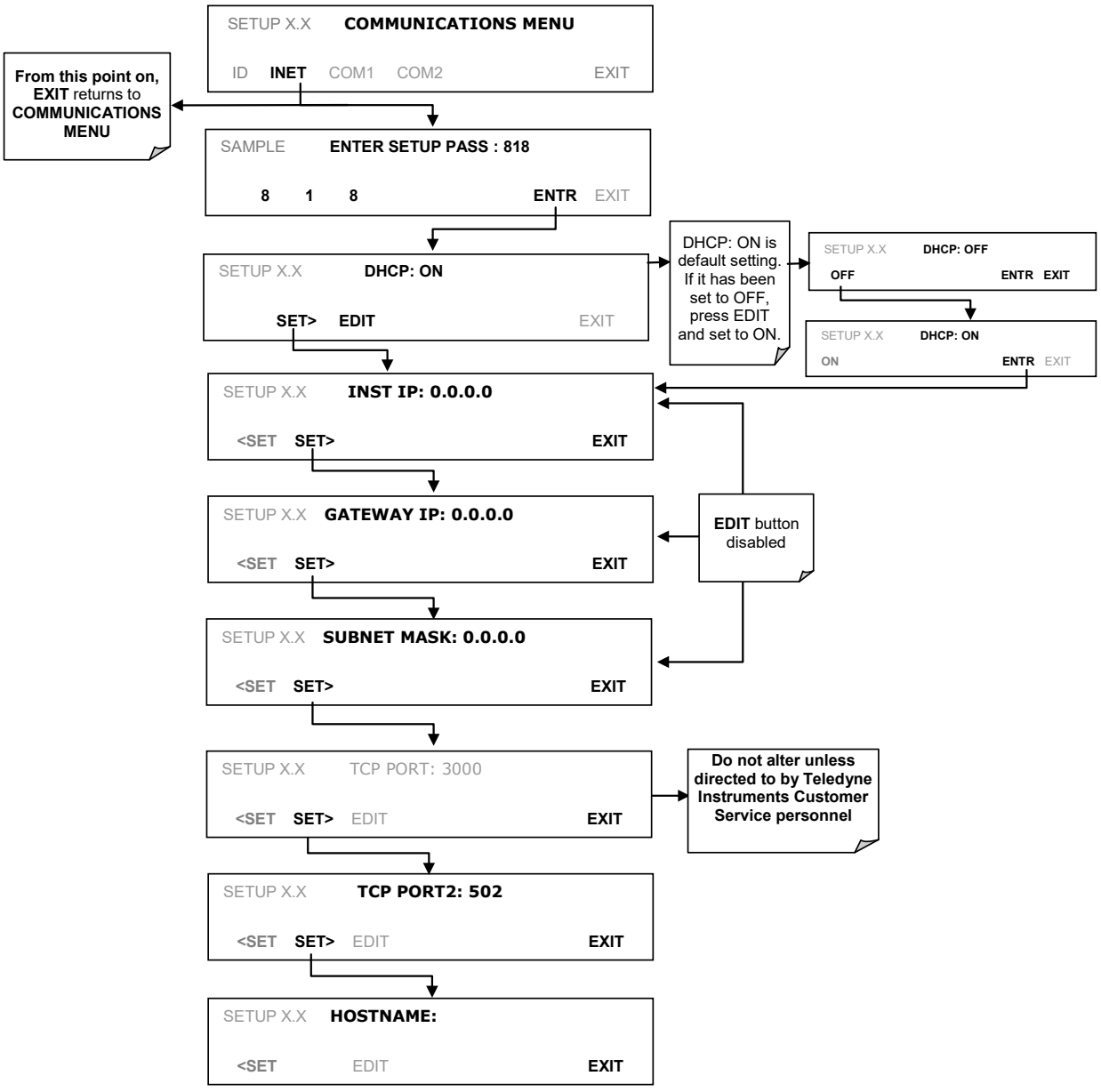

Note

It is a good idea to check the INET settings the first time you power up your analyzer after it has been physically connected to the LAN/Internet to make sure that the DHCP has successfully downloaded the appropriate information from you network server(s). The Ethernet configuration properties are viewable via the analyzer's front panel (SETUP>MORE>COMM>INET).

Table 6-3: LAN/Internet Default Configuration Properties

PROPERTY	DEFAULT STATE		DESCRIPTION
DHCP STATUS	On	Editable	This displays whether the DHCP is turned ON or OFF.
INSTRUMENT IP ADDRESS	Configured by DHCP	**EDIT** key disabled when DHCP is **ON**	This string of four packets of 1 to 3 numbers each (e.g. 192.168.76.55.) is the address of the analyzer itself.
GATEWAY IP ADDRESS	Configured by DHCP	**EDIT** key disabled when DHCP is **ON**	A string of numbers very similar to the Instrument IP address (e.g. 192.168.76.1.), the address of the computer used by your LAN to access the Internet.
SUBNET MASK	Configured by DHCP	**EDIT** key disabled when DHCP is **ON**	Also a string of four packets of 1 to 3 numbers each (e.g. 255.255.252.0) that identifies the LAN the device is connected to. All addressable devices and computers on a LAN must have the same subnet mask. Any transmissions sent to devices with different subnets are assumed to be outside of the LAN and are routed through the gateway computer onto the Internet.
TCP PORT[1]	**3000**	Editable	This number defines the terminal control port by which the instrument is addressed by terminal emulation software, such as Internet or Teledyne API's APICOM.
HOST NAME	[initially blank]	Editable	The name by which your analyzer will appear when addressed from other computers on the LAN or via the Internet. While the default setting for all Teledyne API analyzers is the model number, the host name may be changed to fit customer needs.

[1] Do not change the setting for this property unless instructed to by Teledyne API Technical Support personnel.

Note **If the gateway IP, instrument IP and the subnet mask are all zeroes (e.g. "0.0.0.0"), the DCHP was not successful, in which case you may have to configure the analyzer's Ethernet properties manually. Consult your network administrator.**

To view the above properties listed in Table 6-3, press:

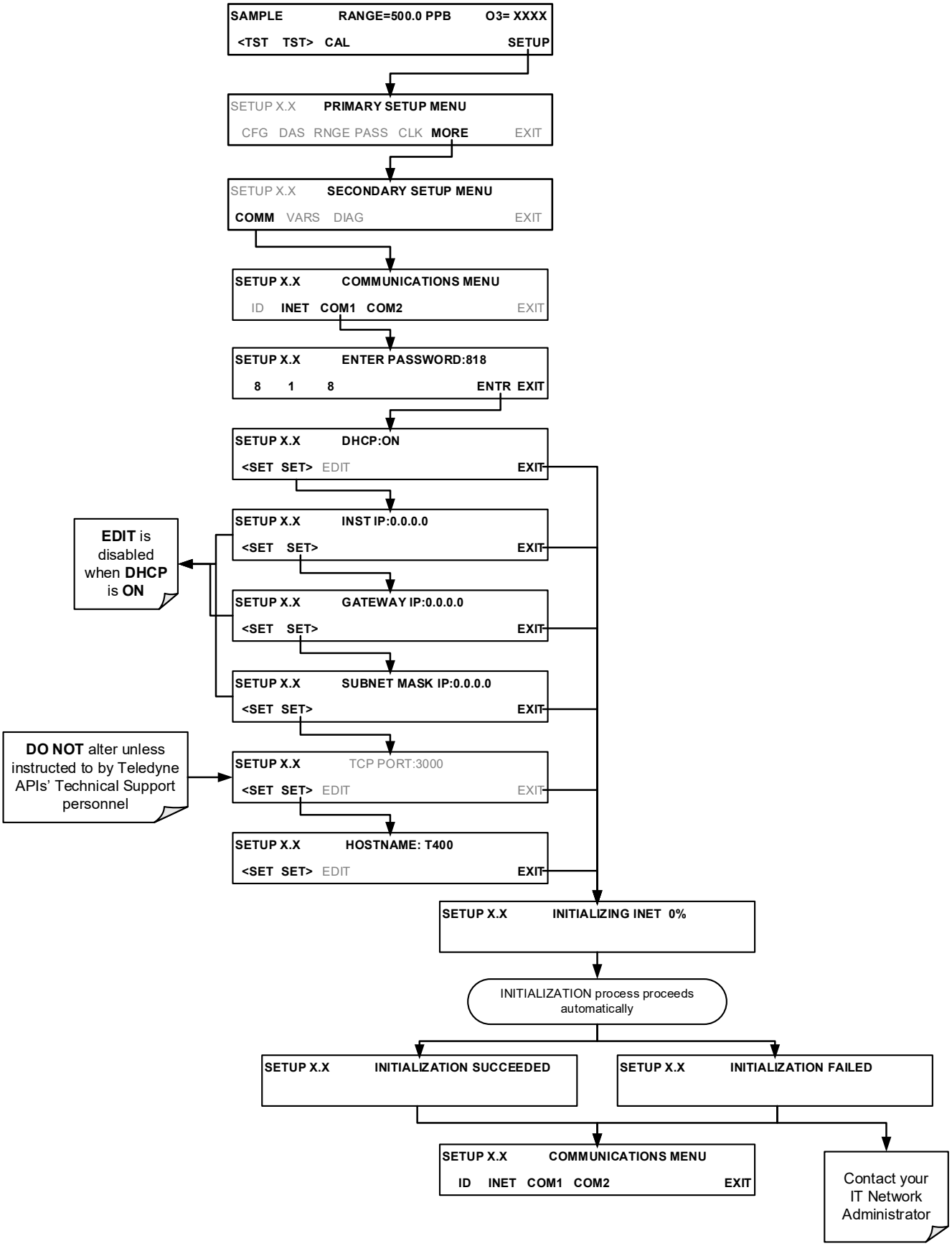

6.5.3. CHANGING THE ANALYZER'S HOSTNAME

The **HOSTNAME** is the name by which the analyzer appears on your network. The default name for all Teledyne API T400 analyzers is initially blank. To create or to subsequently change this name (particularly if you have more than one T400 analyzer on your network), press:

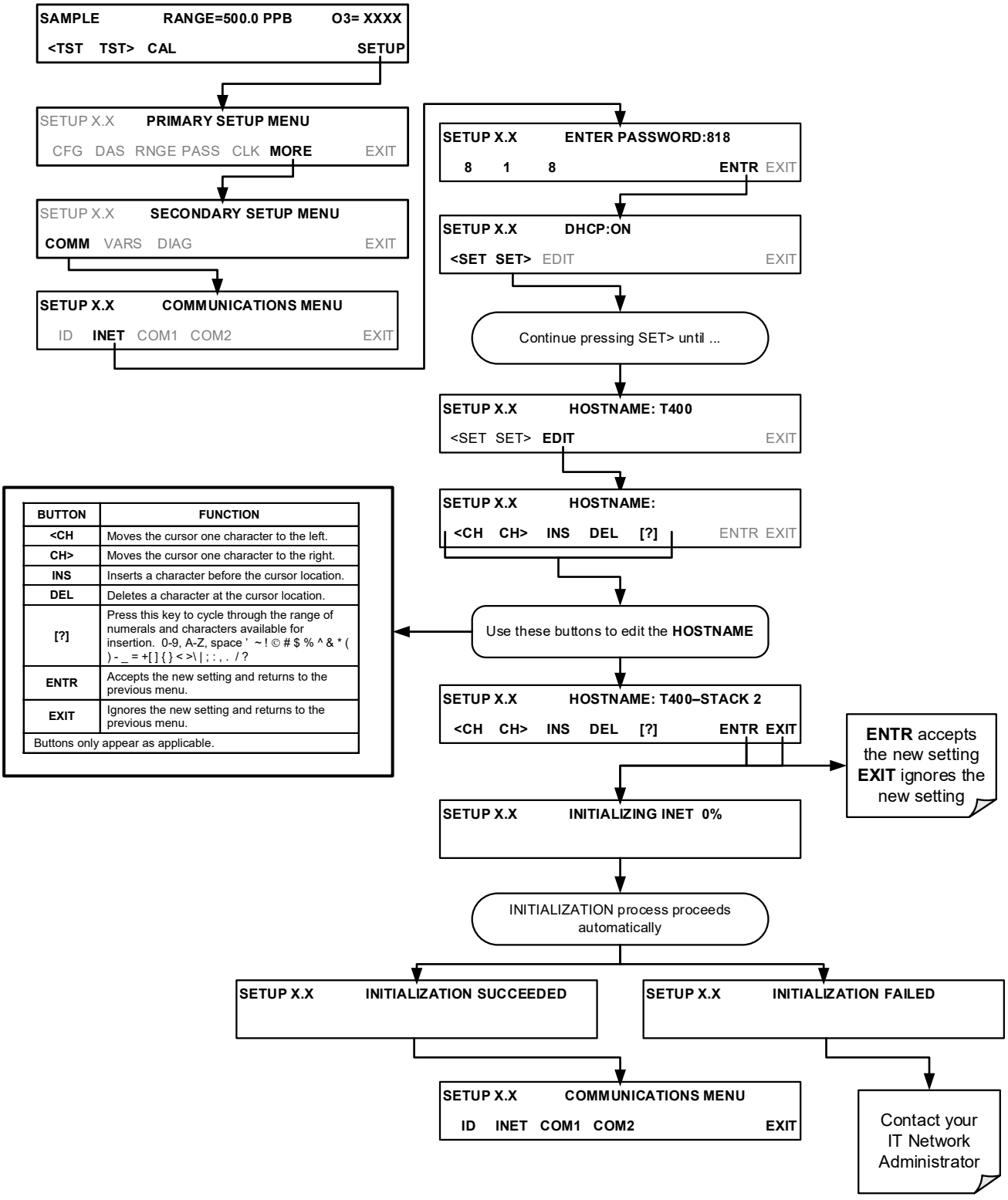

BUTTON	FUNCTION
<CH	Moves the cursor one character to the left.
CH>	Moves the cursor one character to the right.
INS	Inserts a character before the cursor location.
DEL	Deletes a character at the cursor location.
[?]	Press this key to cycle through the range of numerals and characters available for insertion. 0-9, A-Z, space ' ~ ! © # $ % ^ & * ( ) - _ = +[ ] { } < >\ | ; : , . / ?
ENTR	Accepts the new setting and returns to the previous menu.
EXIT	Ignores the new setting and returns to the previous menu.
Buttons only appear as applicable.	

6.6. USB PORT

Using the USB port disallows use of the rear panel COM2 port except when using the COM2 port for multidrop communication. USB configuration requires matching the baud rates of the instrument and the PC to which it is connected. To view or change the instrument baud rate:

1. Go to SETUP>MORE>COMM>COM2 menu.
2. Press the SET> button until "COM2 BAUD RATE:xxxxx" appears in the Param field of the instrument display.
3. Check that the baud rate of the instrument matches the baud rate of your PC (if they do not match, change the instrument's baud rate to match that of the PC).
4. Press the ENTR button to accept any changes.

6.7. COMMUNICATIONS PROTOCOLS

Two communications protocols available with the analyzer are MODBUS and Hessen. MODBUS setup instructions are provided here (Section 6.7.1), and registers are provided in Appendix A. Hessen setup and operation istructions are provided in Section 6.7.2.

6.7.1. MODBUS

The following set of instructions assumes that the user is familiar with MODBUS communications, and provides minimal information to get started. For additional instruction, please refer to the Teledyne API MODBUS manual, PN 06276. Also refer to www.modbus.org for MODBUS communication protocols.

Minimum Requirements

- Instrument firmware with MODBUS capabilities installed.
- MODBUS-compatible software (TAPI uses MODBUS Poll for testing; see www.modbustools.com)
- Personal computer
- Communications cable (Ethernet or USB or RS232)
- Possibly a null modem adapter or cable

MODBUS Setup:

Set Com Mode parameters Comm Slave ID	Ethernet: Using the front panel menu, go to SETUP – MORE – COMM – INET; scroll through the INET submenu until you reach TCP PORT 2 (the standard setting is 502), then continue to TCP PORT 2 MODBUS TCP/IP; press EDIT and toggle the menu button to change the setting to ON, then press ENTR. (Change Machine ID if needed: see "Slave ID"). USB/RS232: Using the front panel menu, go to SETUP – MORE – COMM – COM2 – EDIT; scroll through the COM2 EDIT submenu until the display shows COM2 MODBUS RTU: OFF (press OFF to change the setting to ON. Scroll NEXT to COM2 MODBUS ASCII and ensure it is set to OFF. Press ENTR to keep the new settings. (If RTU is not available with your communications equipment, set the COM2 MODBUS ASCII setting to ON and ensure that COM2 MODBUS RTU is set to OFF. Press ENTR to keep the new settings). A MODBUS slave ID must be set for each instrument. Valid slave ID's are in the range of 1 to 247. If your analyzer is connected to a serial network (ie. RS-485), a unique Slave ID must be assigned to each instrument. To set the slave ID for the instrument, go to SETUP – MORE – COMM – ID. The default MACHINE ID is the same as the model number. Toggle the menu buttons to change the ID.
Reboot analyzer	For the settings to take effect, power down the analyzer, wait 5 seconds, and power up the analyzer.
Make appropriate cable connections	Connect your analyzer either: • via its Ethernet or USB port to a PC (this may require a USB-to-RS232 adapter for your PC; if so, also install the sofware driver from the CD supplied with the adapter, and reboot the computer if required), or • via its COM2 port to a null modem (this may require a null modem adapter or cable).
Specify MODBUS software settings (examples used here are for MODBUS Poll software)	1. Click Setup / [Read / Write Definition] /. a. In the Read/Write Definition window (see example that follows) select a **Function** (what you wish to read from the analyzer). b. Input **Quantity** (based on your firware's register map). c. In the View section of the Read/Write Definition window select a **Display** (typically Float Inverse). d. Click **OK**. 2. Next, click Connection/Connect. a. In the Connection Setup window (see example that follows), select the options based on your computer. b. Press **OK**.
Read the Modbus Poll Register	Use the Register Map to find the test parameter names for the values displayed (see example that follows If desired, assign an alias for each.

Example Read/Write Definition window:

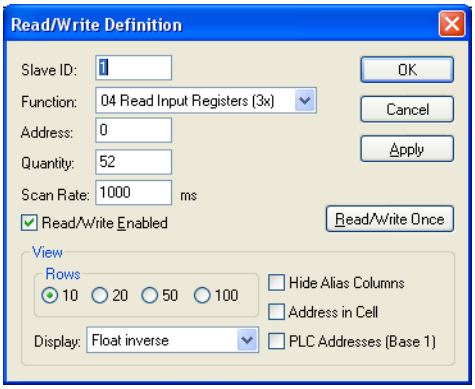

Example Connection Setup window:

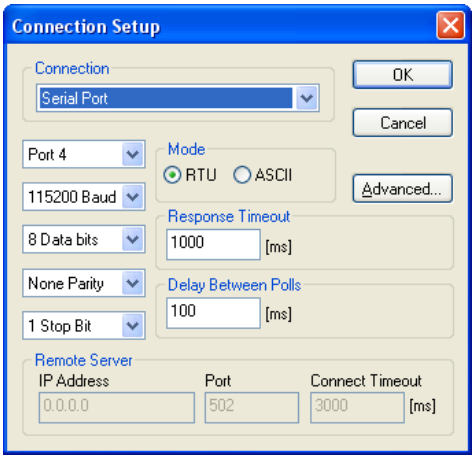

Example MODBUS Poll window:

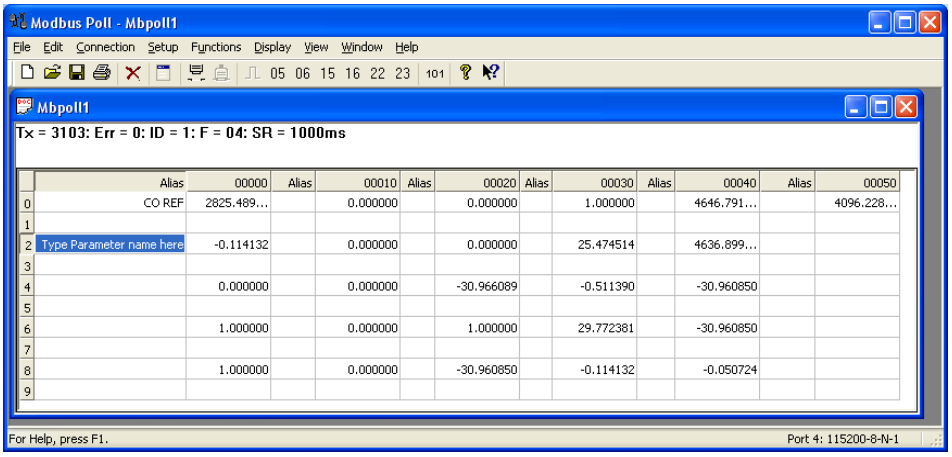

6.7.2. **HESSEN**

The Hessen protocol is a multidrop protocol, in which several remote instruments are connected via a common communications channel to a host computer. The remote instruments are regarded as slaves of the host computer. The remote instruments are unaware that they are connected to a multidrop bus and never initiate Hessen protocol messages. They only respond to commands from the host computer and only when they receive a command containing their own unique ID number.

The Hessen protocol is designed to accomplish two things: to obtain the status of remote instruments, including the concentrations of all the gases measured; and to place remote instruments into zero or span calibration or measure mode. API's implementation supports both of these principal features.

The Hessen protocol is not well defined; therefore while API's application is completely compatible with the protocol itself, it may be different from implementations by other companies.

The following subsections describe the basics for setting up your instrument to operate over a Hessen Protocol network. For more detailed information as well as a list of host computer commands and examples of command and response message syntax, download the *Manual Addendum for Hessen Protocol* from the Teledyne API web site: http://www.teledyne-api.com/manuals/index.asp .

6.7.3. HESSEN COMM PORT CONFIGURATION

Hessen protocol requires the communication parameters of the T400's COMM ports to be set differently than the standard configuration as shown in the table below.

Table 6-4: RS-232 Communication Parameters for Hessen Protocol

PARAMETER	STANDARD	HESSEN
Baud Rate	300 – 115200	1200
Data Bits	8	7
Stop Bits	1	2
Parity	None	Even
Duplex	Full	Half

To change the baud rate of the T400's COMM ports, see Section 6.2.2.

Note **Make sure that the communication parameters of the host computer are also properly set.**

Note **The instrument software has a 200 ms latency before it responds to commands issued by the host computer. This latency should present no problems, but you should be aware of it and not issue commands to the instrument too frequently.**

6.7.4. **ACTIVATING HESSEN PROTOCOL**

The first step in configuring the T400 to operate over a Hessen protocol network is to activate the Hessen mode for COMM ports and configure the communication parameters for the port(s) appropriately. Press:

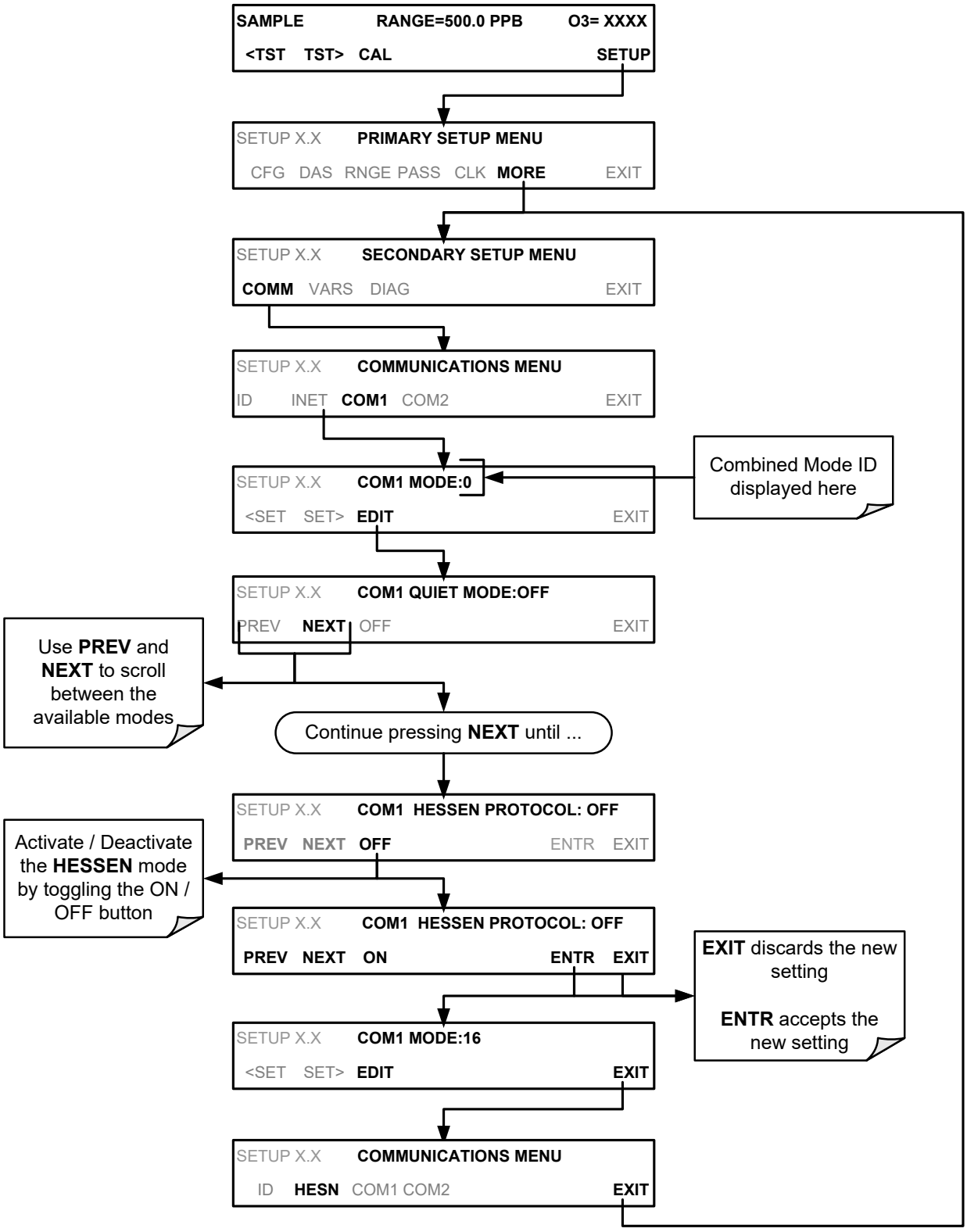

6.7.5. SELECTING A HESSEN PROTOCOL TYPE

Currently there are two versions of Hessen Protocol in use. The original implementation, referred to as **TYPE 1**, and a more recently released version, **TYPE 2** that has more flexibility when operating with instruments that can measure more than one type of gas. For more specific information about the difference between **TYPE 1** and **TYPE 2** download the *Manual Addendum for Hessen Protocol* from the Teledyne API web site: http://www.teledyne-api.com/manuals/index.asp .

To select a Hessen Protocol Type press:

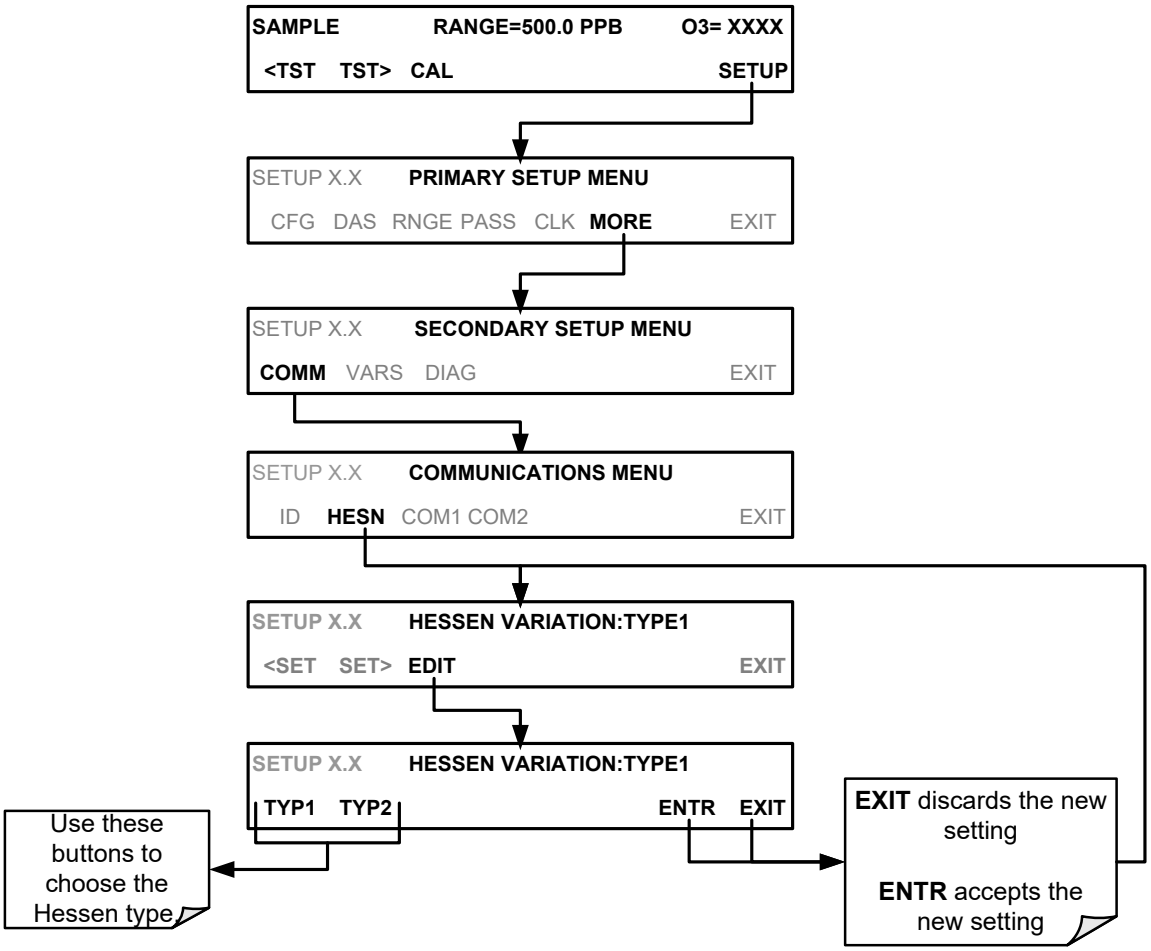

Note **While Hessen Protocol Mode can be activated independently for COM1 and COM2, The TYPE selection affects both Ports.**

6.7.6. SETTING THE HESSEN PROTOCOL RESPONSE MODE

The Teledyne API implementation of Hessen Protocol allows the user to choose one of several different modes of response for the analyzer.

Table 6-5: Teledyne API Hessen Protocol Response Modes

MODE ID	MODE DESCRIPTION
CMD	This is the Default Setting. Reponses from the instrument are encoded as the traditional command format. Style and format of responses depend on exact coding of the initiating command.
BCC	Responses from the instrument are always delimited with <STX> (at the beginning of the response), <ETX> (at the end of the response) followed by a 2 digit Block Check Code (checksum), regardless of the command encoding.
TEXT	Responses from the instrument are always delimited with <CR> at the beginning and the end of the string, regardless of the command encoding.

To select a Hessen response mode, press:

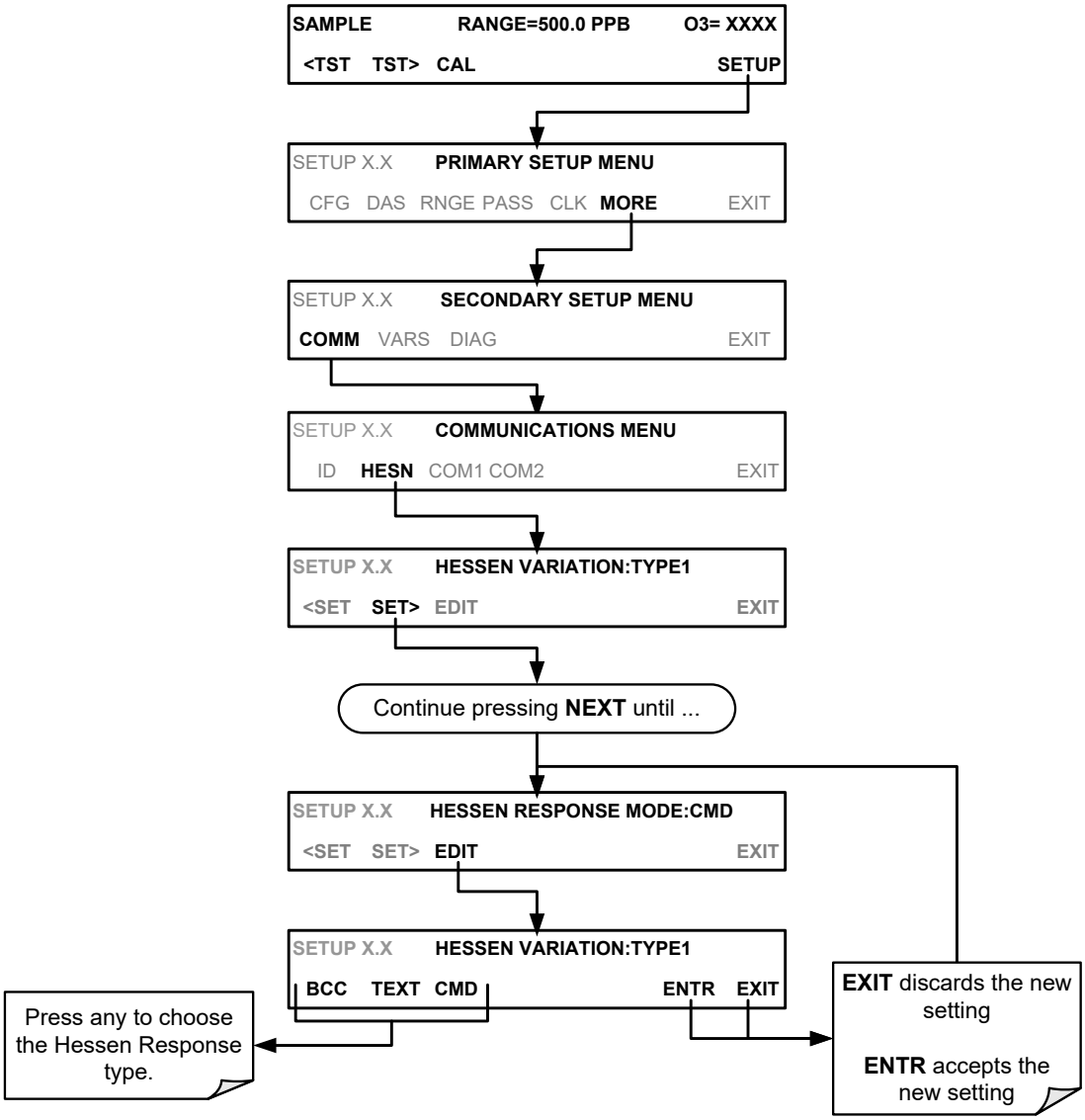

6.7.7. HESSEN PROTOCOL GAS LIST ENTRIES

6.7.7.1. Gas List Entry Format and Definitions

The T400 analyzer keeps a list of available gas types. Each entry in this list is of the following format.

[GAS TYPE],[RANGE],[GAS ID],[REPORTED]

Where:

GAS TYPE = The type of gas to be reported (e.g O_3, CO_2, NO_x, etc.). In the case of the T400 analyzer, there is only one gas type: O_3.

RANGE = The concentration range for this entry in the gas list. This feature permits the user to select which concentration range will be used for this gas list entry. The T400 analyzer has two ranges: **RANGE1** (LOW) & **RANGE2** (HIGH).

- 0 - The HESSEN protocol to use whatever range is currently active.
- 1 - The HESSEN protocol will always use **RANGE1** for this gas list entry
- 2 - The HESSEN protocol will always use **RANGE2** for this gas list entry
- 3 - Not applicable to the T400 analyzer.

GAS ID = An identification number assigned to a specific gas. In the case of the T400 analyzer, there is only one gas O_3, and its default GAS ID is 400. This ID number should not be modified.

REPORTED = States whether this list entry is to be reported or not reported whenever this gas type or instrument is polled by the HESSEN network. If the list entry is not to be reported this field will be blank.

The T400 analyzer is a single gas instrument that measures O_3. Its default gas list consists of only one entry that reads:

O3, 0, 400, REPORTED

If you wish to have just the last concentration value stored for a specific range, this list entry should be edited or additional entries should be added to the list.

6.7.7.2. **Editing or Adding HESSEN Gas List Entries**

To add or edit an entry to the Hessen Gas List, press:

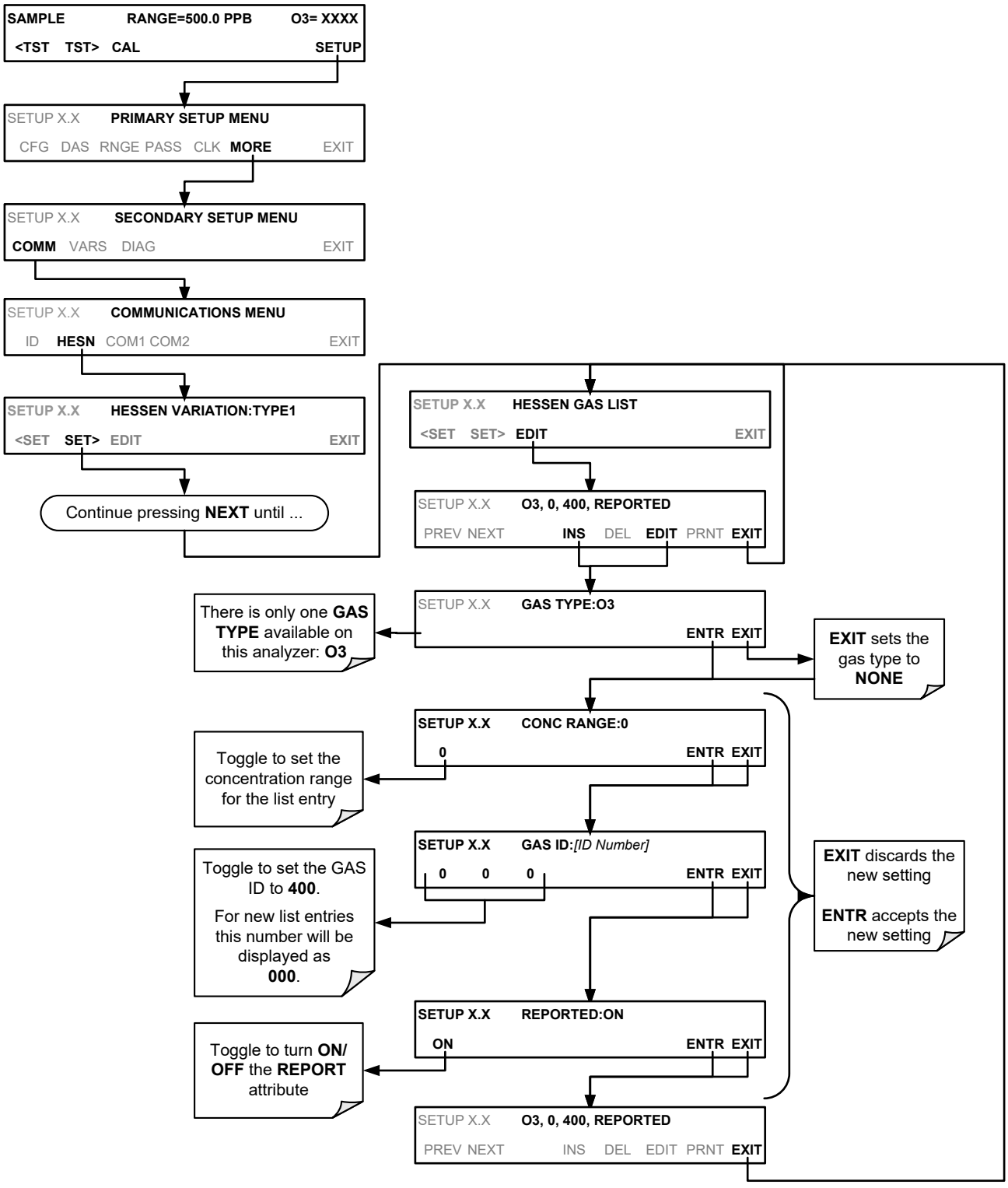

6.7.7.3. **Deleting HESSEN Gas List Entries**

To delete an entry from the Hessen Gas list, press:

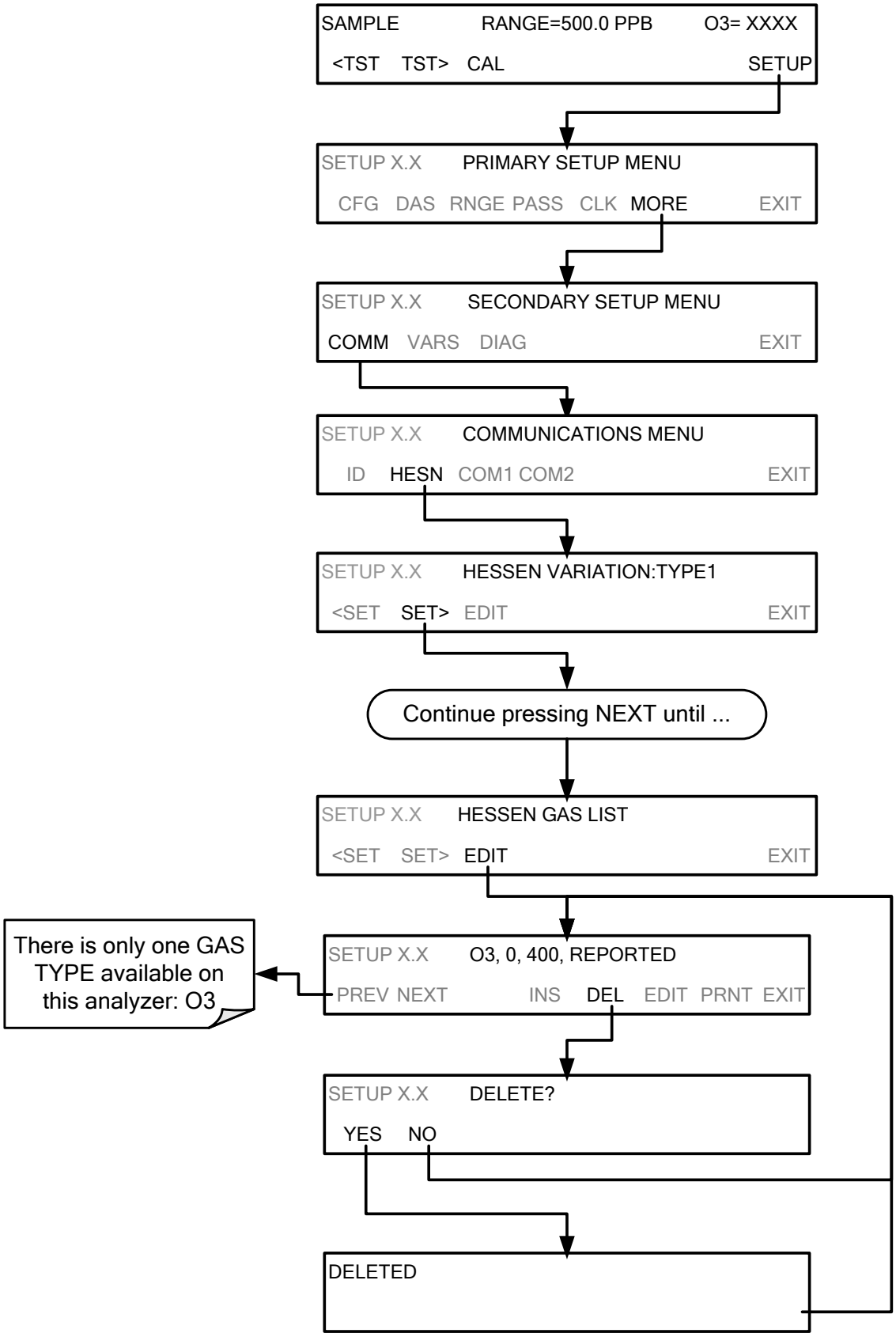

6.7.8. SETTING HESSEN PROTOCOL STATUS FLAGS

Teledyne API implementation of Hessen protocols includes a set of status bits that the instrument includes in responses to inform the host computer of its condition. Each bit can be assigned to one operational and warning message flag. The default settings for these bit/flags are:

Table 6-6: Default Hessen Status Bit Assignments

STATUS FLAG NAME	DEFAULT BIT ASSIGNMENT
WARNING FLAGS	
SAMPLE FLOW WARNING	0001
PHOTO REF WARNING	0002
SAMPLE PRESS WARN	0004
SAMPLE TEMP WARN	0008
O3 GEN REF WARNING[1]	0010
O3 GEN LAMP WARNING[1]	0020
O3 GEN TEMP WARN[1]	0040[2]
PHOTO TEMP WARNING	0040[2]
OPERATIONAL FLAGS	
In **MANUAL** Calibration Mode	0200
In **ZERO** Calibration Mode	0400
In **SPAN** Calibration Mode	0800[2]
In **LO SPAN** Calibration Mode	0800[2]
UNITS OF MEASURE FLAGS	
UGM	0000
MGM	2000
PPB	4000
PPM	6000
SPARE/UNUSED BITS	0080, 0100, 1000, 8000
UNASSIGNED FLAGS (0000)	
LAMP STABIL WARN	**LAMP DRIVER WARN**
O3 SCRUB TEMP WARN[3]	**ANALOG CAL WARNING**
BOX TEMP WARNING	**CANNOT DYN ZERO**
SYSTEM RESET	**CANNOT DYN SPAN**
RELAY BOARD WARNING	**INVALID CONC**
REAR BOARD NOT DETECTED	**Instrument is in MP CAL mode**
	Instrument is in MP CAL mode

[1] Only appears if the IZS option is installed

To assign or reset the status flag bit assignments, press:

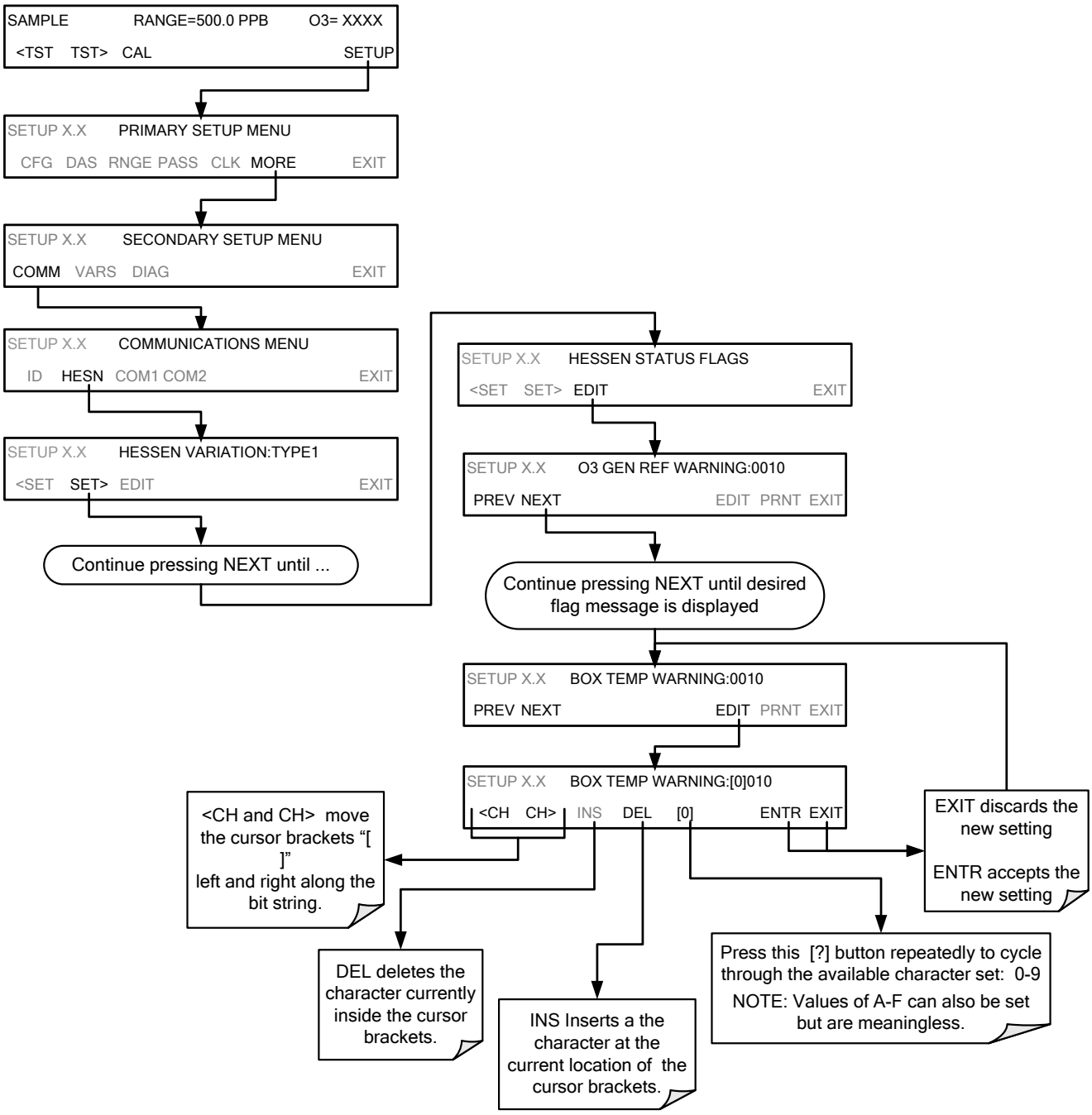

6.7.9. **INSTRUMENT ID**

Each instrument on a Hessen Protocol network must have a unique identifier (ID number). If more than one T400 analyzer is on the Hessen network, refer to Section 5.7.1 for information and for customizing the ID of each.

7. DATA ACQUISITION SYSTEM (DAS) AND APICOM

The T400 analyzer contains a flexible and powerful internal data acquisition system (DAS) that enables the analyzer to store concentration and calibration data as well as a host of diagnostic parameters. The DAS of the T400 is capable of capturing several months worth of data, depending on how it is configured. The data are stored in non-volatile memory and are retained even when the instrument is powered off. Data are stored in plain text format for easy retrieval and use in common data analysis programs (such as spreadsheet-type programs).

The DAS is designed to be flexible: users have full control over the type, length and reporting time of the data. The DAS permits users to access stored data through the instrument's front panel or its communication ports.

The principal use of the DAS is logging data for trend analysis and predictive diagnostics, which can assist in identifying possible problems before they affect the functionality of the analyzer. The secondary use is for data analysis, documentation and archival in electronic format.

To support the DAS functionality, Teledyne API offers APICOM, a program that provides a visual interface for remote or local setup, configuration and data retrieval of the DAS (see Section 8.1.1). Using APICOM, data can even be retrieved automatically to a remote computer for further processing. The APICOM manual, which is included with the program, contains a more detailed description of the DAS structure and configuration, which is briefly described in this document.

The T400 is configured with basic DAS already enabled. The data channels included in this basic structure may be used as is or temporarily disabled for later or occasional use.

IMPORTANT

IMPACT ON READINGS OR DATA

DAS operation is suspended whenever its configuration is edited using the analyzer's front panel and therefore data may be lost. To prevent such data loss, it is recommended to use the APICOM graphical user interface for DAS changes.

Please be aware that all stored data will be erased if the analyzer's disk-on-module or CPU board is replaced or if the configuration data stored there is reset.

7.1. DAS STATUS

The green **SAMPLE LED** on the instrument front panel, which indicates the analyzer status, also indicates certain aspects of the DAS status as described in Table 7-1.

Table 7-1: Front Panel LED Status Indicators for DAS

LED STATE	DAS Status
OFF	System is in calibration mode. Data logging can be enabled or disabled for this mode. Calibration data are typically stored at the end of calibration periods, concentration data are typically not sampled, diagnostic data should be collected.
BLINKING	Instrument is in hold-off mode, a short period after the system exits calibrations. DAS channels can be enabled or disabled for this period. Concentration data are typically disabled whereas diagnostic data should be collected.
ON	System is sampling normally.

The DAS can be disabled only by disabling or deleting its individual data channels.

7.2. DAS STRUCTURE

The DAS is designed around the feature of a "record". A record is a single data point. The type of date recorded in a record is defined by two properties:

- **PARAMETER** type that defines the kind of data to be stored (e.g. the average of O_3 concentrations measured with three digits of precision). See Section 7.4.2.1.
- A **TRIGGER** event that defines when the record is made (e.g. timer; every time a calibration is performed, etc.). See Section 7.4.2.

The specific **PARAMETERS** and **TRIGGER** events that describe an individual record are defined in a construct called a **DATA CHANNEL** (see Section 7.4). Each data channel relates one or more parameters with a specific trigger event and various other operational characteristics related to the records being made (e.g. the channels name, number or records to be made, time period between records, whether or not the record is exported via the analyzer's RS-232 port, etc.).

7.3. DAS CHANNELS

The key to the flexibility of the DAS is its ability to store a large number of combinations of triggering events and data parameters in the form of data channels. Users may create up to 20 data channels and each channel can contain one or more parameters. For each channel, the following are selected:

- One triggering event is selected
- Up to 50 data parameters, which can be the shared between channels.
- Several properties that define the structure of the channel and allow the user to make operational decisions regarding the channel.

Table 7-2: DAS Data Channel Properties

PROPERTY	DESCRIPTION	DEFAULT	SETTING RANGE
NAME	The name of the data channel.	**"NONE"**	Up to 6 letters or digits[1].
TRIGGERING EVENT	The event that triggers the data channel to measure and store the datum	**ATIMER**	Any available event (see Appendix A-5).
NUMBER AND LIST OF PARAMETERS	A User-configurable list of data types to be recorded in any given channel.	**1-DETMES**	Any available parameter (see Appendix A-5).
REPORT PERIOD	The amount of time between each channel data point.	**000:01:00**	000:00:01 to 366:23:59 (Days:Hours:Minutes)
NUMBER OF RECORDS	The number of reports that will be stored in the data file. Once the limit is exceeded, the oldest data is over-written.	**100**	1 to 1 million, limited by available storage space.
RS-232 REPORT	Enables the analyzer to automatically report channel values to the RS-232 ports.	**OFF**	OFF or ON
CHANNEL ENABLED	Enables or disables the channel. Allows a channel to be temporarily turned off without deleting it.	**ON**	OFF or ON
CAL HOLD OFF	Disables sampling of data parameters while instrument is in calibration mode[2].	**OFF**	OFF or ON

[1] More with APICOM, but only the first six are displayed on the front panel).

[2] When enabled, records are not recorded until the DAS HOLD OFF period is passed after calibration mode. DAS HOLD OFF is set in the **VARS** menu (see Section 6.12.)

7.3.1. DAS DEFAULT CHANNELS

A set of default Data Channels has been included in the analyzer's software for logging O_3 concentration and certain predictive diagnostic data. These default channels include but are not limited to:

- **CONC:** Samples O_3 concentration at one minute intervals and stores an average every hour with a time and date stamp. Readings during calibration and calibration hold off are not included in the data. By default, the last 800 hourly averages are stored.
- **O3REF:** Logs the O_3 reference value once a day with a time and date stamp. This data can be used to track lamp intensity and predict when lamp replacement will be required. By default, the last 730 daily readings are stored.
- **PNUMTC:** Collects sample flow and sample pressure data at five-minute intervals and stores an average once a day with a time and date stamp. This is useful for monitoring the condition of the pump and critical flow orifice (sample flow) and the sample filter (clogging indicated by a drop in sample pressure) over time to predict when maintenance will be required. The last 360 daily averages (about 1 year) are stored.
- **O3GEN:** Logs the O_3 generator drive value once a day with a time and date stamp. This data can be used to track O_3 generator lamp intensity and predict when lamp replacement will be required. By default, the last 360 daily readings are stored.
- **CALDAT:** Logs new slope and offset every time a zero or span calibration is performed. This data channel also records the instrument readings just prior to performing a calibration. This information is useful for performing predictive diagnostics as part of a regular maintenance schedule (See Section 10.1). The CALDAT channel collects data based on events (e.g. a calibration operation) rather than a timed interval. This does not represent any specific length of time since it is dependent on how often calibrations are performed.

These default data channels can be used as they are, or they can be customized from the front panel to fit a specific application. They can also be deleted to make room for custom user-programmed data channels.

Appendix A-5 lists the firmware-specific DAS configuration in plain-text format. This text file can either be loaded into APICOM and then modified and uploaded to the instrument or can be copied and pasted into a terminal program to be sent to the analyzer.

IMPORTANT

IMPACT ON READINGS OR DATA

Sending a DAS configuration to the analyzer through its COM ports will replace the existing configuration and will delete all stored data. Back up any existing data and the DAS configuration before uploading new settings.

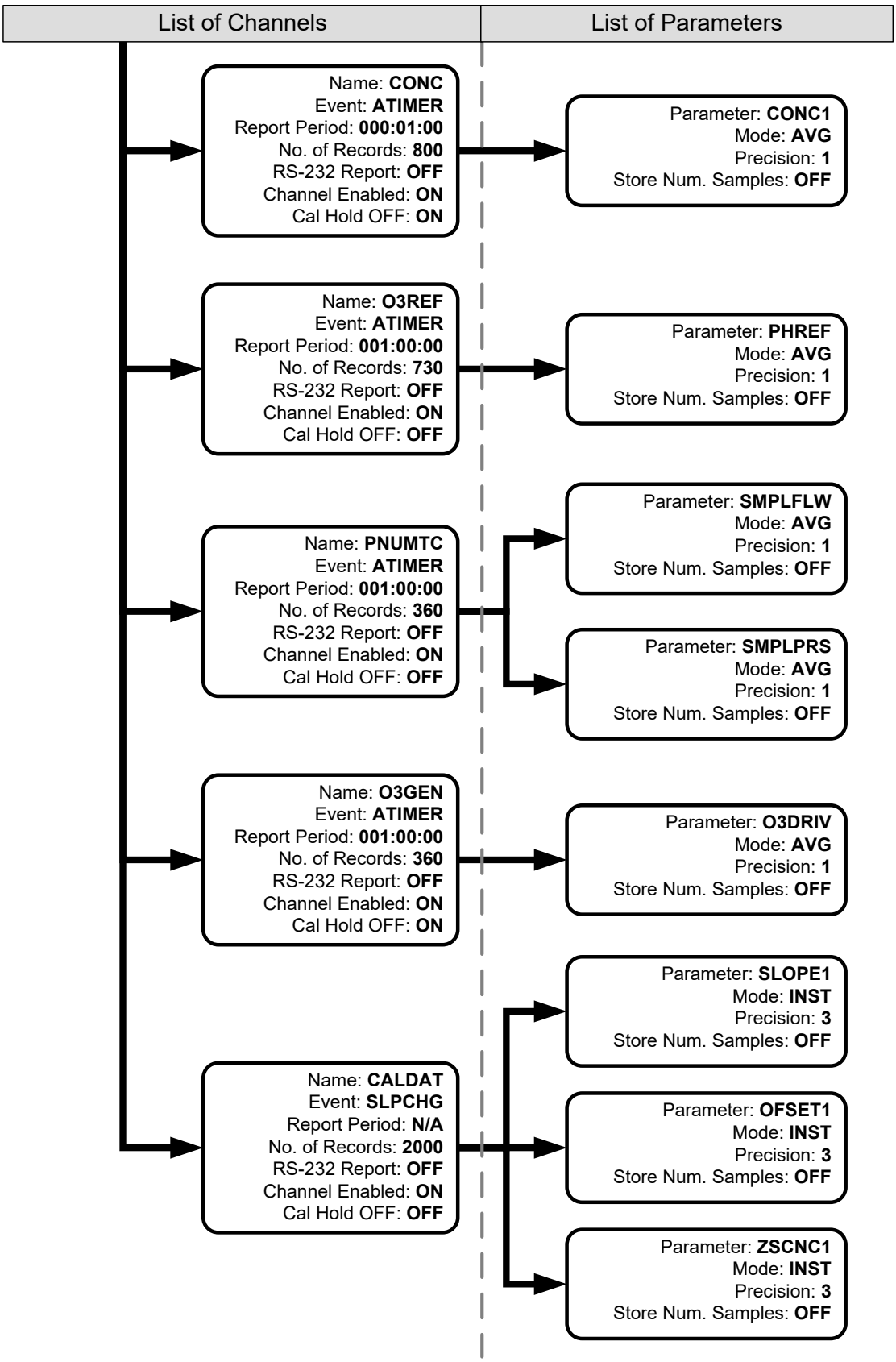

Figure 7-1: Default T400 DAS Channels Setup

7.3.2. SETUP →DAS →VIEW: VIEWING DAS CHANNELS AND INDIVIDUAL RECORDS

DAS data and settings can be viewed on the front panel through the following menu sequence:

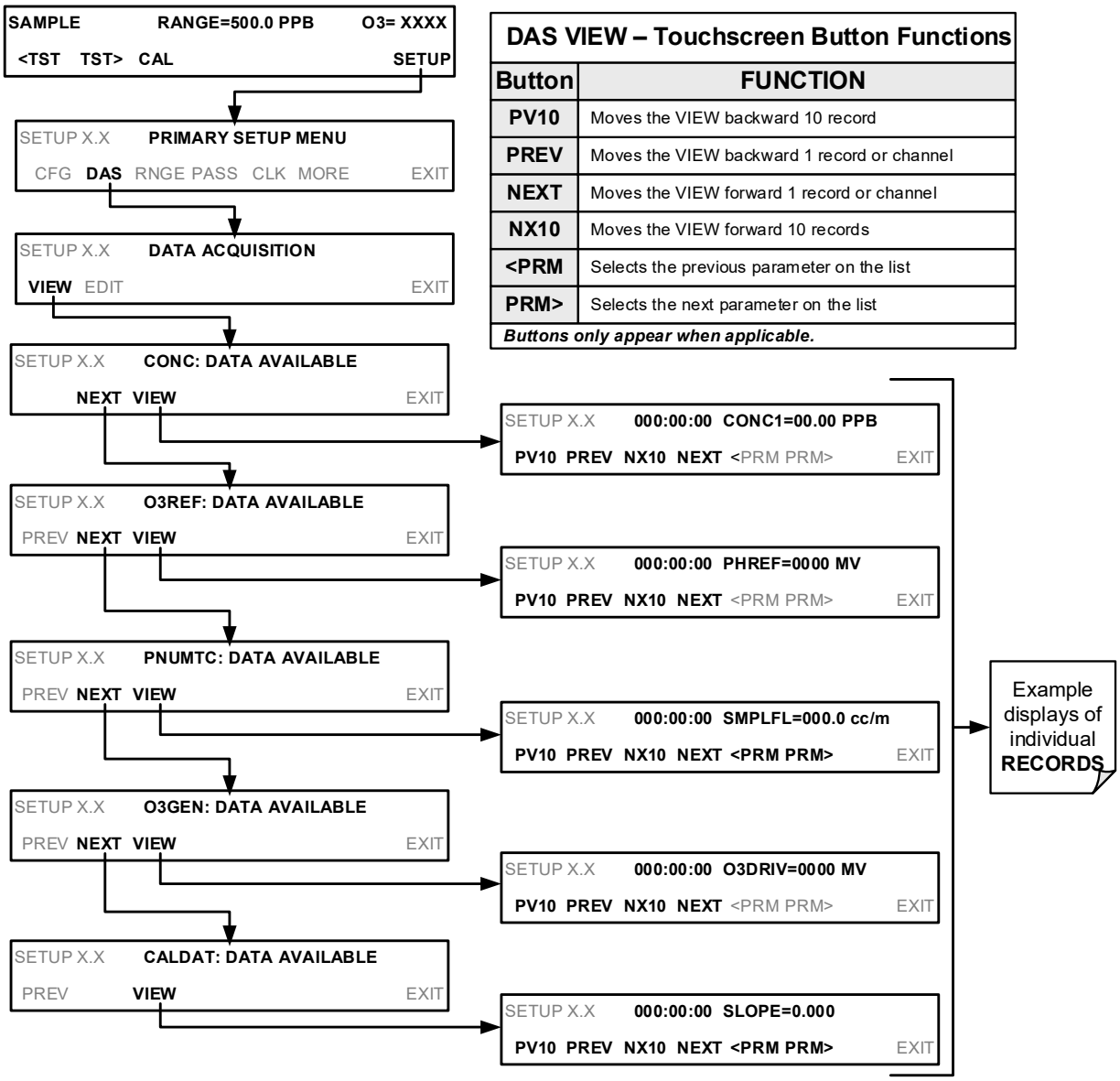

DAS VIEW – Touchscreen Button Functions	
Button	**FUNCTION**
PV10	Moves the VIEW backward 10 record
PREV	Moves the VIEW backward 1 record or channel
NEXT	Moves the VIEW forward 1 record or channel
NX10	Moves the VIEW forward 10 records
<PRM	Selects the previous parameter on the list
PRM>	Selects the next parameter on the list
Buttons only appear when applicable.	

7.4. SETUP →DAS →EDIT: ACCESSING THE DAS EDIT MODE

DAS configuration is most conveniently done through the APICOM remote control program. The following menu list shows how to edit using the front panel:

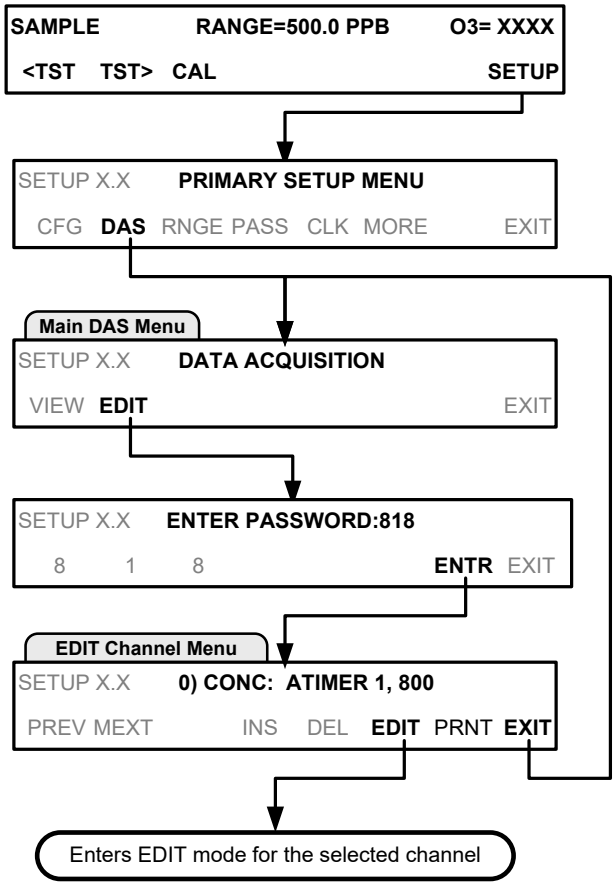

DAS EDIT – Touchscreen Button Functions	
Button	**FUNCTION**
PREV	Selects the previous data channel in the list
NEXT	Selects the next data channel in the list
INS	Inserts a new data channel into the list BEFORE the selected channel
DEL	Deletes the currently selected data channel
EDIT	Enters EDIT mode
PRINT	Exports the configuration of all data channels to the RS-232 interface
Buttons only appear when applicable	

When editing the data channels, the top line of the display indicates some of the configuration parameters. For example, the display line:

0) CONC1: ATIMER, 4, 800

translates to the following configuration:

Channel No.: 0
NAME: CONC1
TRIGGER EVENT: ATIMER
PARAMETERS: Four parameters are included in this channel
EVENT: This channel is set up to store 800 records.

7.4.1. EDITING DAS DATA CHANNEL NAMES

To edit the name of a DAS data channel, follow the instruction shown in Section 7.4 then press:

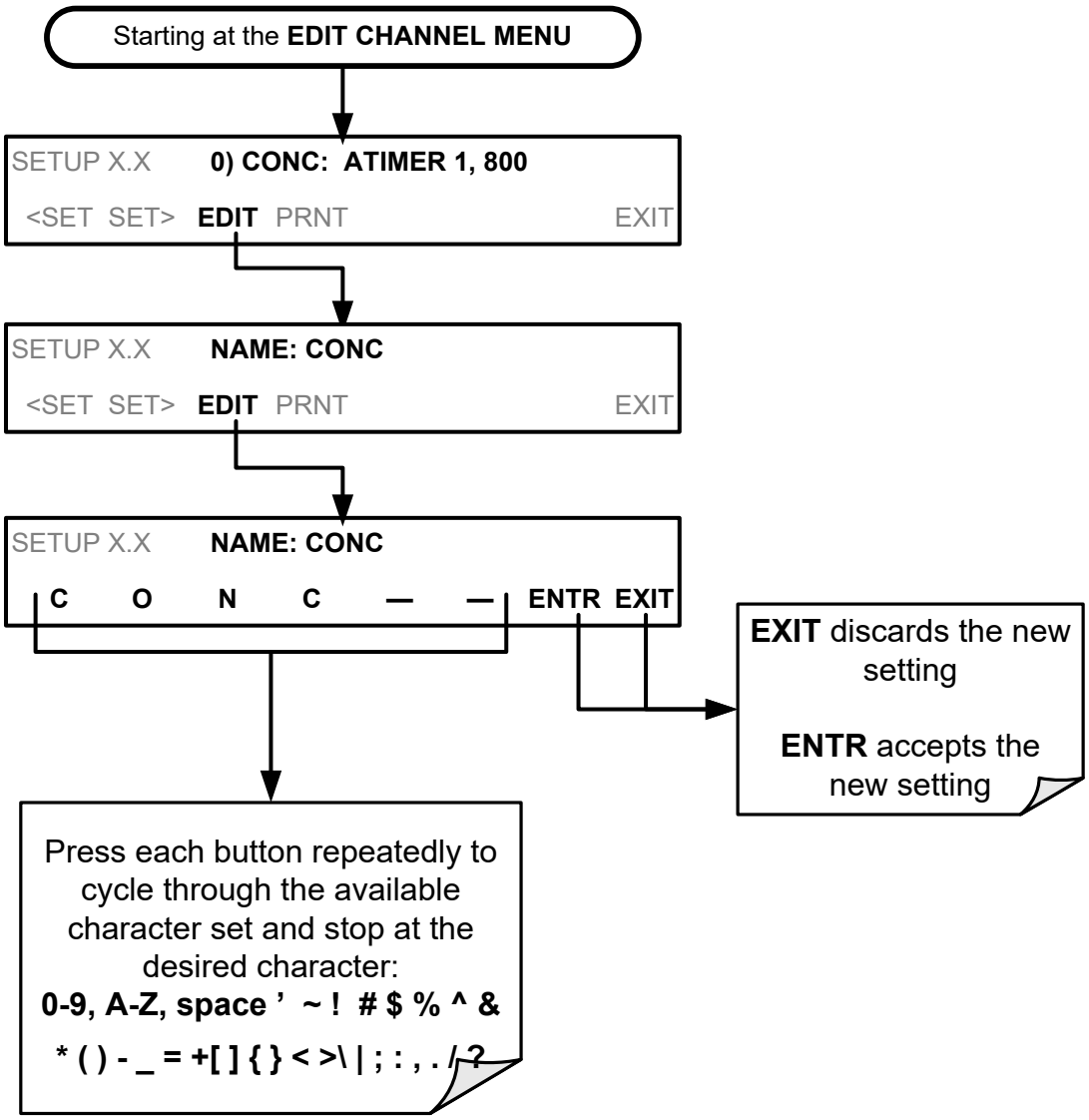

7.4.2. EDITING DAS TRIGGERING EVENTS

Triggering events define when and how the DAS records a measurement of any given data channel. Triggering events are firmware-specific and the list of Triggers for this model analyzer can be found in Appendix A. The most commonly used triggering events are:

- **ATIMER:** Sampling at regular intervals specified by an automatic timer. Most trending information is usually stored at such regular intervals, which can be instantaneous or averaged.
- **EXITZR, EXITSP, and SLPCHG** (exit zero, exit span, slope change): Sampling at the end of (irregularly occurring) calibrations or when the response slope changes. These triggering events create instantaneous data points, e.g., for the new slope and offset (concentration response) values at the end of a calibration. Zero and slope values are valuable to monitor response drift and to document when the instrument was calibrated.
- **WARNINGS:** Some data may be useful when stored in one of several warning messages. This is helpful for trouble-shooting by monitoring when a particular warning occurred.

To edit the list of data parameters associated with a specific data channel, follow the instruction shown in Section 7.4 then press:

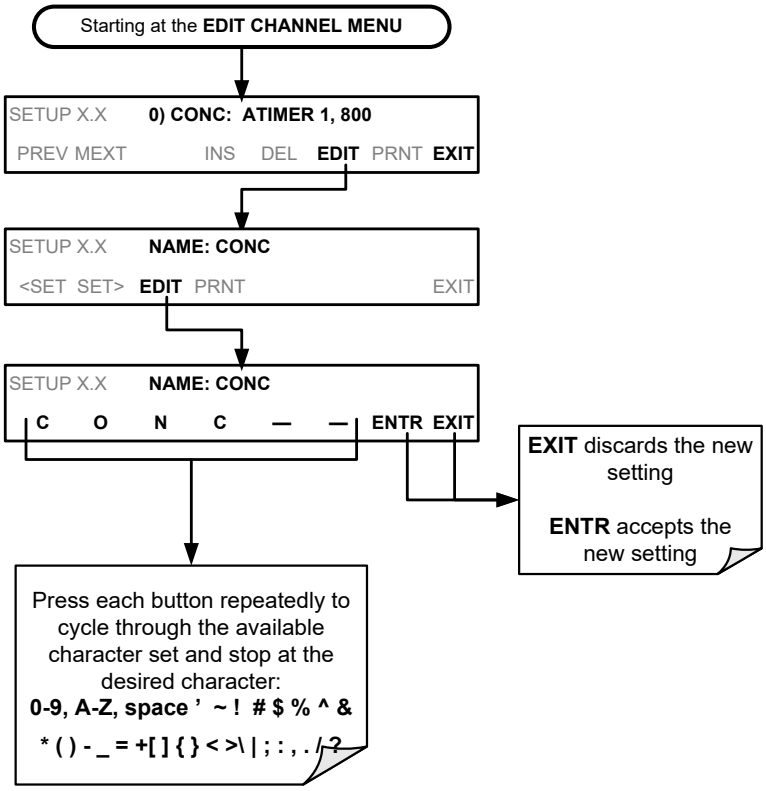

Note **A full list of DAS Trigger Events can be found in Appendix A-5 of this manual.**

7.4.2.1. Editing DAS Parameters

Data parameters are types of data that may be measured and stored by the DAS. For each Teledyne API analyzer model, the list of available data parameters is different, fully defined and not customizable. Appendix A-5 lists firmware specific data parameters for the T400. DAS parameters include things like O_3 concentration measurements, temperatures of the various heaters placed around the analyzer, pressures and flows of the pneumatic subsystem and other diagnostic measurements as well as calibration data such as slope and offset.

Most data parameters have associated measurement units, such as mV, ppb, cm^3/min, etc., although some parameters have no units. With the exception of concentration readings, none of these units of measure can be changed. To change the units of measure for concentration readings See Section 6.8.6.

Note

DAS does not keep track of the units (i.e. PPM or PPB) of each concentration value and DAS data files may contain concentrations in multiple units if the unit was changed during data acquisition.

Each data parameter has user-configurable functions that define how the data are recorded:

Table 7-3: DAS Data Parameter Functions

FUNCTION	EFFECT
PARAMETER	Instrument-specific parameter name.
SAMPLE MODE	**INST:** Records instantaneous reading. **AVG:** Records average reading during reporting interval. **MIN:** Records minimum (instantaneous) reading during reporting interval. **MAX:** Records maximum (instantaneous) reading during reporting interval. **SDEV:** Records the standard deviation of the data points recorded during the reporting interval.
PRECISION	Decimal precision of parameter value (0-4).
STORE NUM. SAMPLES	**OFF:** Stores only the average (default). **ON:** Stores the average and the number of samples in each average for a parameter. This property is only useful when the AVG sample mode is used. Note that the number of samples is the same for all parameters in one channel and needs to be specified only for one of the parameters in that channel.

Users can specify up to 50 parameters per data channel (the T400 provides about 40 parameters). However, the number of parameters and channels is ultimately limited by available memory.

Data channels can be edited individually from the front panel without affecting other data channels. However, when editing a data channel, such as during adding, deleting or editing parameters, all data for that particular channel will be lost, because the DAS can store only data of one format (number of parameter columns etc.) for any given channel. In addition, a DAS configuration can only be uploaded remotely as an entire set of channels. Hence, remote update of the DAS will always delete all current channels and stored data.

To modify, add or delete a parameter, follow the instruction shown in Section 7.4 then press:

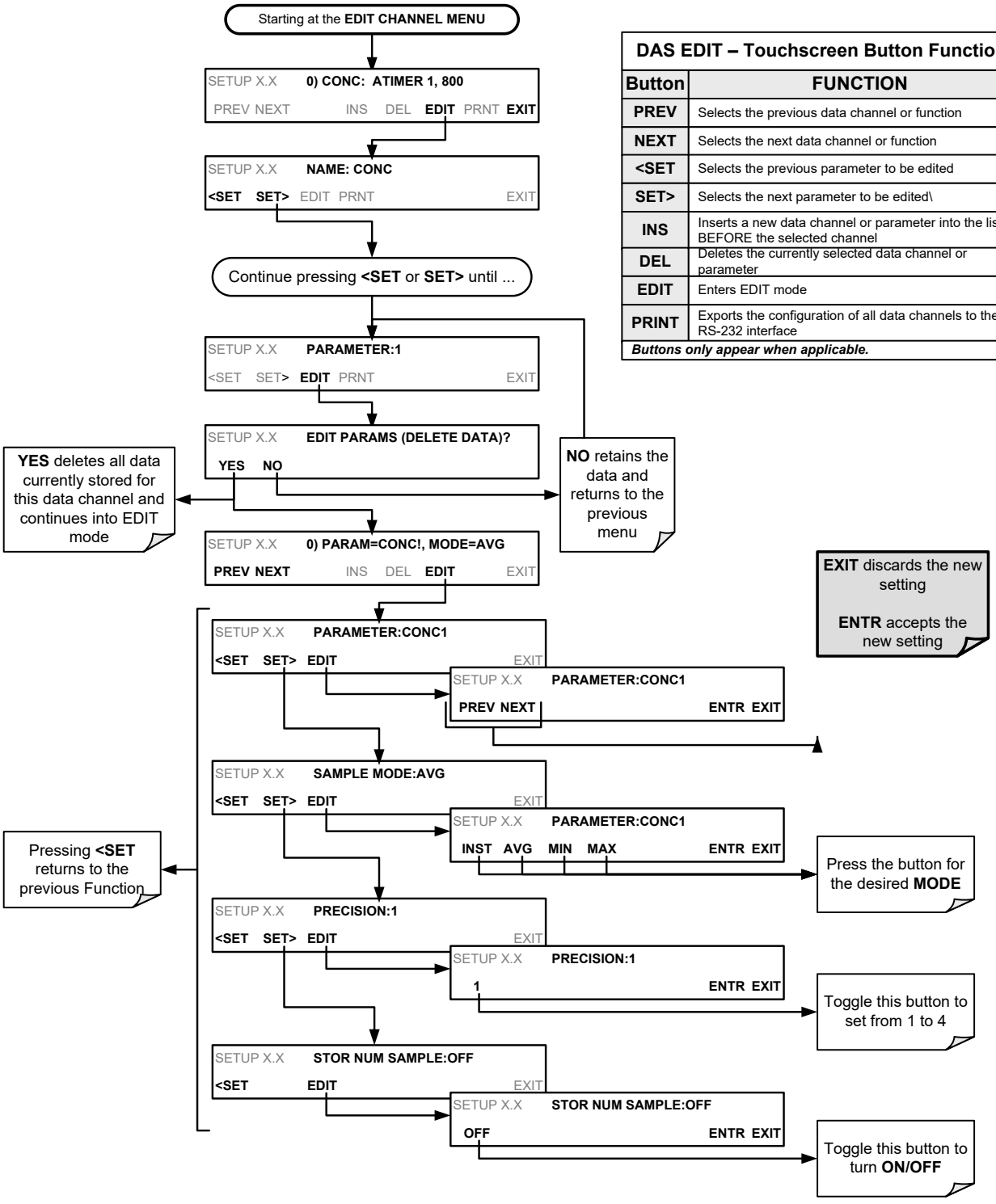

DAS EDIT – Touchscreen Button Functions

Button	FUNCTION
PREV	Selects the previous data channel or function
NEXT	Selects the next data channel or function
<SET	Selects the previous parameter to be edited
SET>	Selects the next parameter to be edited\
INS	Inserts a new data channel or parameter into the list BEFORE the selected channel
DEL	Deletes the currently selected data channel or parameter
EDIT	Enters EDIT mode
PRINT	Exports the configuration of all data channels to the RS-232 interface

Buttons only appear when applicable.

Note

When the STORE NUM SAMPLES feature is turned on, the instrument will store the number of sample readings that were used to compute the AVG, MIN or MAX value but not the readings themselves.

7.4.3. EDITING SAMPLE PERIOD AND REPORT PERIOD

The DAS defines two principal time periods by which sample readings are taken and permanently recorded:

- **SAMPLE PERIOD:** Determines how often DAS temporarily records a sample reading of the parameter in volatile memory. The **SAMPLE PERIOD** is set to one minute by default and generally cannot be accessed from the standard DAS front panel menu, but is available via the instrument's communication ports by using APICOM or the analyzer's standard serial data protocol. **SAMPLE PERIOD** is only used when the DAS parameter's sample mode is set for AVG, MIN or MAX.
- **REPORT PERIOD:** Sets how often the sample readings stored in volatile memory are processed, (e.g. average, minimum or maximum are calculated) and the results stored permanently in the instrument's Disk-on-Module as well as transmitted via the analyzer's communication ports. The **REPORT PERIOD** may be set from the front panel. If the INST sample mode is selected, the instrument stores and reports an instantaneous reading of the selected parameter at the end of the chosen report period.

To define the **REPORT PERIOD**, follow the instruction shown in Section 7.4 then press:

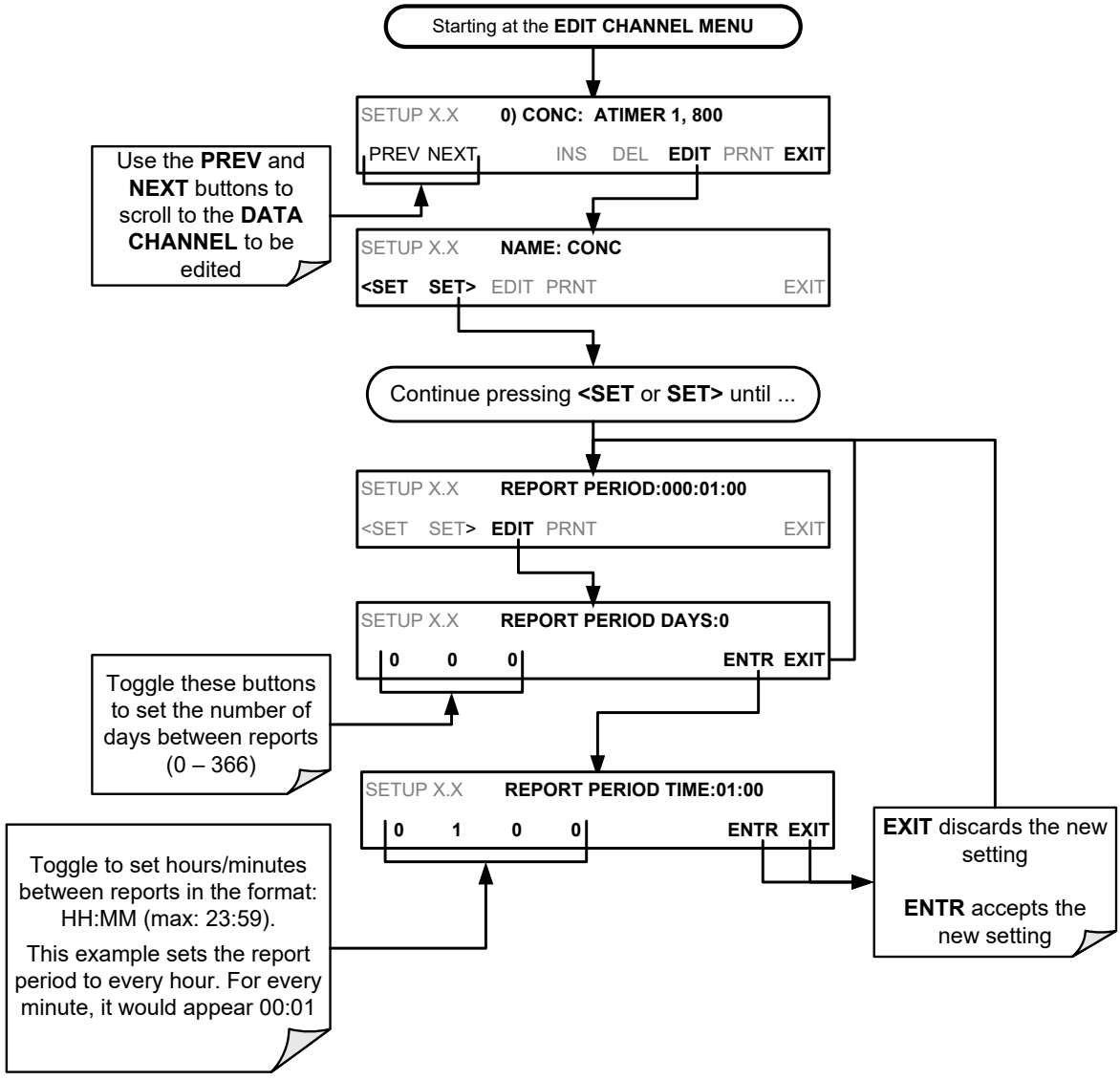

The **SAMPLE PERIOD** and **REPORT PERIOD** intervals are synchronized to the beginning and end of the appropriate interval of the instrument's internal clock.

- If **SAMPLE PERIOD** were set for one minute the first reading would occur at the beginning of the next full minute according to the instrument's internal clock.
- If the **REPORT PERIOD** were set for one hour, the first report activity would occur at the beginning of the next full hour according to the instrument's internal clock.

EXAMPLE: Given the above settings, if DAS were activated at 7:57:35 the first sample would occur at 7:58 and the first report would be calculated at 8:00 consisting of data points for 7:58, 7:59, and 8:00.

During the next hour (from 8:01 to 9:00), the instrument will take a sample reading every minute and include 60 sample readings.

Note

In AVG, MIN or MAX sample modes (see Section 7.4.2.1), the settings for the SAMPLE PERIOD and the REPORT PERIOD determine the number of data points used each time the average, minimum or maximum is calculated, stored and reported to the COMM ports. The actual sample readings are not stored past the end of the chosen REPORT PERIOD. When the STORE NUM SAMPLES feature is turned on, the instrument will store the number of sample readings that were used to compute the AVG, MIN or MAX.

7.4.4. REPORT PERIODS IN PROGRESS WHEN INSTRUMENT IS POWERED OFF

If the instrument is powered off in the middle of a **REPORT PERIOD**, the samples accumulated so far during that period are lost. Once the instrument is turned back on, the DAS restarts taking samples and temporarily them in volatile memory as part of the **REPORT PERIOD** currently active at the time of restart. At the end of this **REPORT PERIOD,** only the sample readings taken since the instrument was turned back on will be included in any AVG, MIN or MAX calculation. Also, the **STORE NUM SAMPLES** feature will report the number of sample readings taken since the instrument was restarted.

7.4.5. EDITING THE NUMBER OF RECORDS

The number of data records in the DAS is limited by its configuration (one megabyte of space on the disk-on-module). However, the actual number of records is also limited by the total number of parameters and channels and other settings in the DAS configuration. Every additional data channel, parameter, number of samples setting etc. will reduce the maximum amount of data points somewhat. In general, however, the maximum data capacity is divided amongst all channels (max: 20) and parameters (max: 50 per channel).

The DAS will check the amount of available data space and prevent the user from specifying too many records at any given point. If, for example, the DAS memory space can accommodate 375 more data records, the **ENTR** button will disappear when trying to specify more than that number of records. This check for memory space may also make an upload of an DAS configuration with APICOM or a terminal program fail, if the combined number of records would be exceeded. In this case, it is suggested to either try to determine what the maximum number of records available is using the front panel

interface or use trial-and-error in designing the DAS script or calculate the number of records using the DAS or APICOM manuals.

To set the **NUMBER OF RECORDS**, follow the instruction shown in Section 7.4 then press:

.

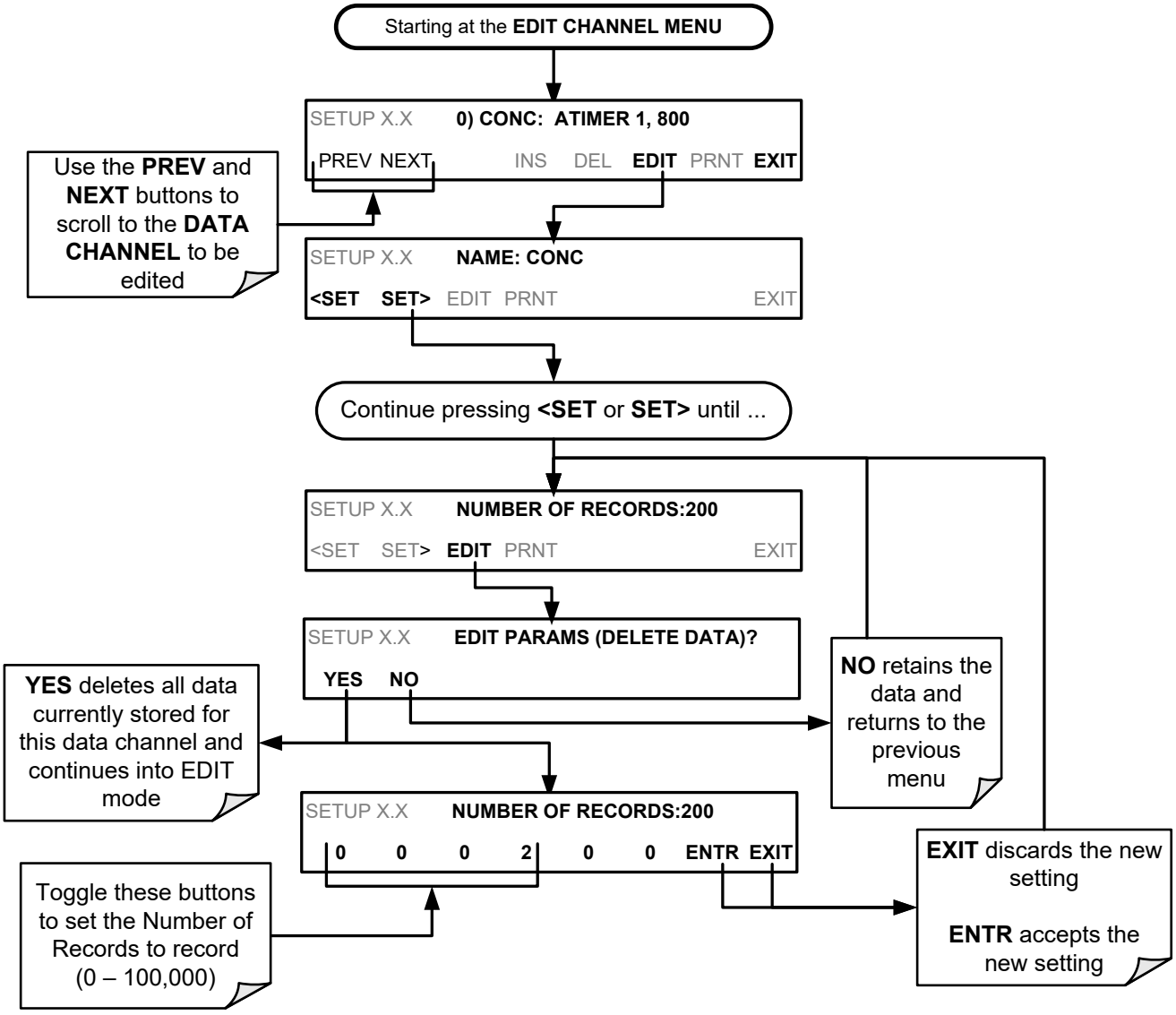

7.4.6. **RS-232 REPORT FUNCTION**

The DAS can automatically report data to the communications ports, where they can be captured with a terminal emulation program or simply viewed by the user using the APICOM software.

To enable automatic **COMM** port reporting, follow the instruction shown in Section 7.4 then press:

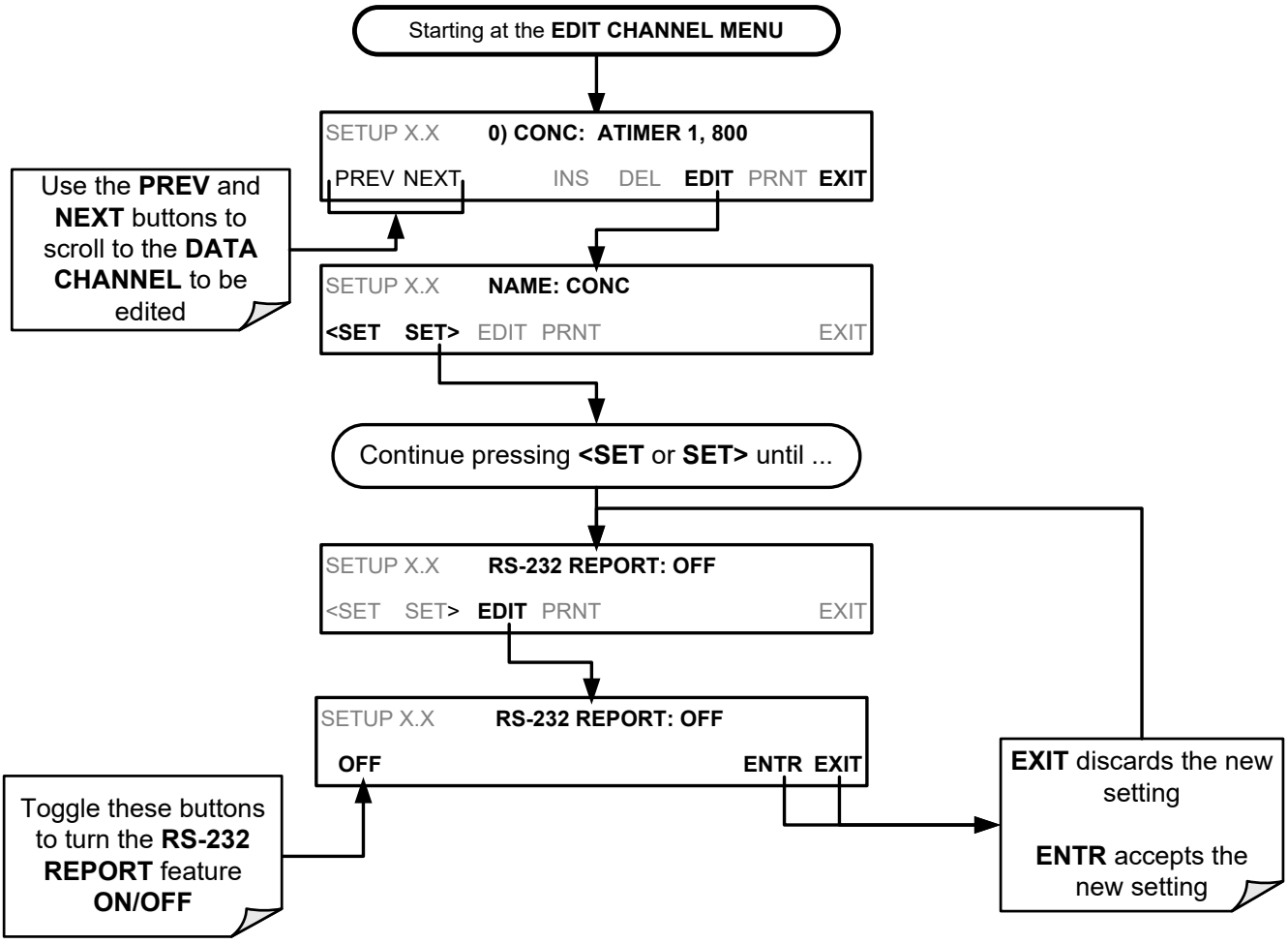

7.4.7. ENABLING / DISABLING THE HOLDOFF FEATURE

The DAS **HOLDOFF** feature prevents data collection during calibration operations.

To enable or disable the **HOLDOFF**, follow the instruction shown in Section 7.4 then press:

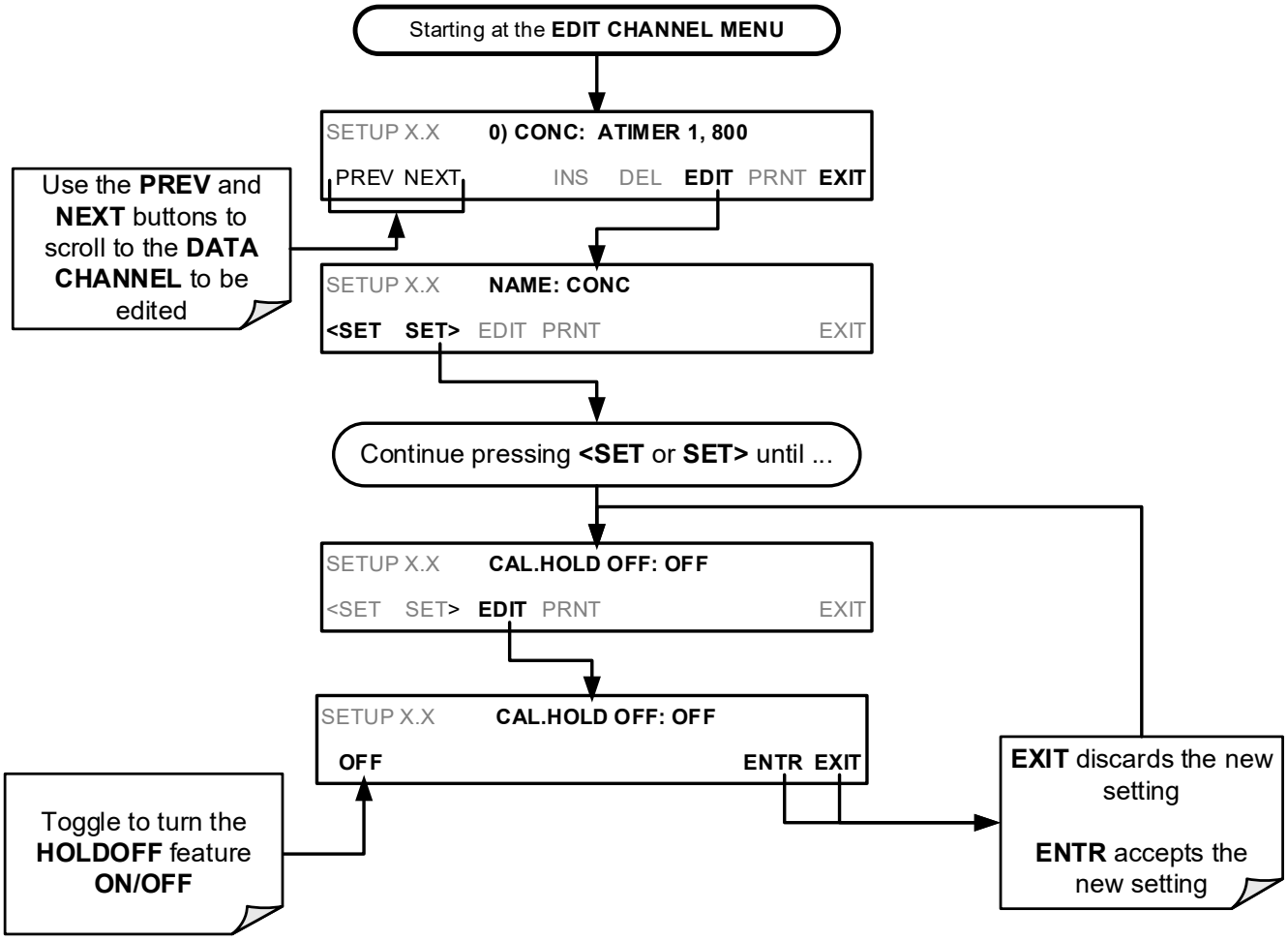

HOLDOFF also prevents DAS measurements from being made at certain times when the quality of the analyzer's O_3 measurements may be suspect (e.g. while the instrument is warming up). In this case, the length of time that the **HOLDOFF** feature is active is determined by the value of the internal variable (**VARS**), **DAS_HOLDOFF.**

To set the length of the DAS_HOLDOFF period, see Section 5.8.

7.4.8. THE COMPACT REPORT FEATURE

When enabled, this option avoids unnecessary line breaks on all RS-232 reports. Instead of reporting each parameter in one channel on a separate line, up to five parameters are reported in one line.

The **COMPACT DATA REPORT** generally cannot be accessed from the standard DAS front panel menu, but is available via the instrument's communication ports by using APICOM or the analyzer's standard serial data protocol.

7.4.9. THE STARTING DATE FEATURE

This option allows the user to specify a starting date for any given channel in case the user wants to start data acquisition only after a certain time and date. If the **STARTING DATE** is in the past (the default condition), the DAS ignores this setting and begins recording data as defined by the **REPORT PERIOD** setting.

The **STARTING DATE** generally cannot be accessed from the standard DAS front panel menu, but is available via the instrument's communication ports by using APICOM or the analyzer's standard serial data protocol.

7.5. DISABLING/ENABLING DATA CHANNELS

Data channels can be temporarily disabled, which can reduce the read/write wear on the disk-on-module.

To disable a data channel, follow the instruction shown in Section 7.4 then press:

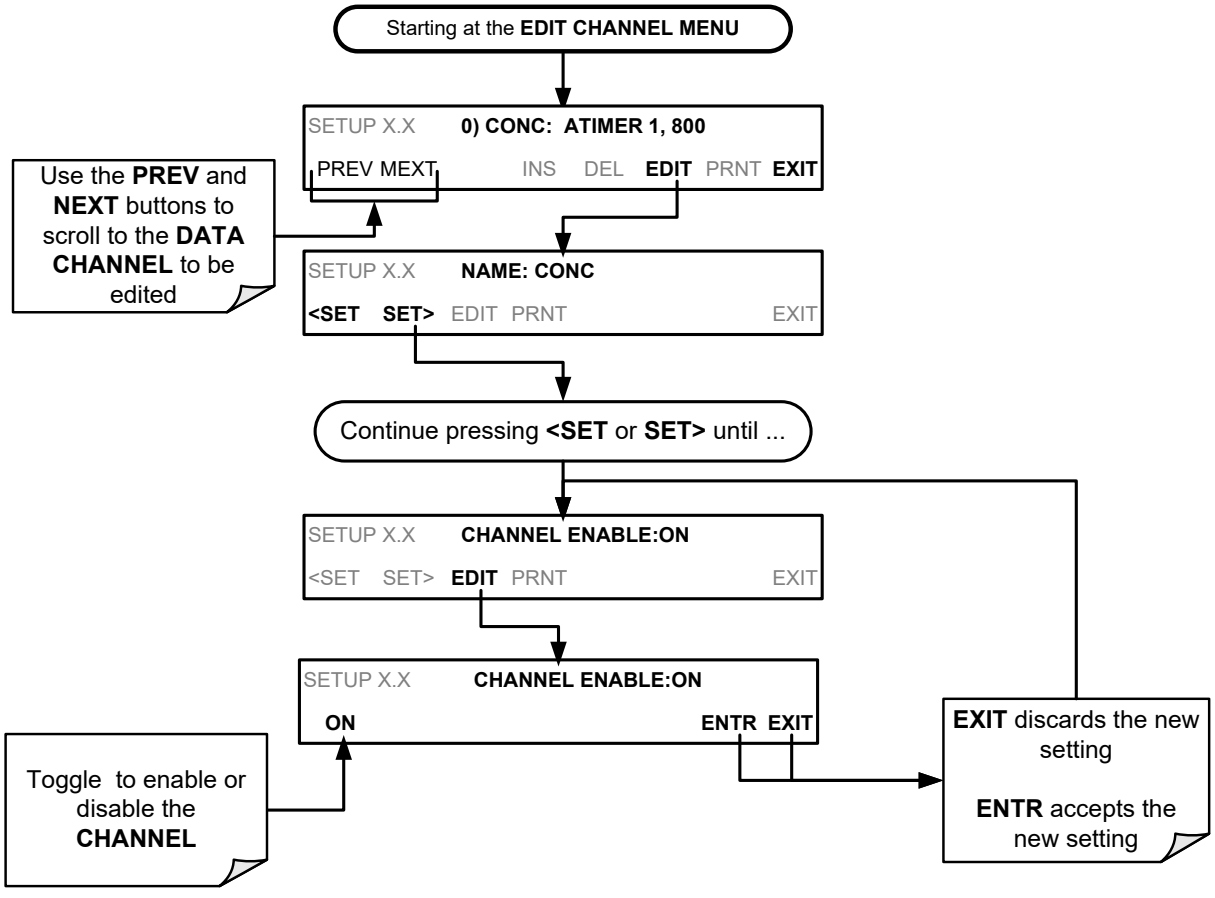

7.6. REMOTE DAS CONFIGURATION

Editing channels, parameters and triggering events as described in this can be performed via the APICOM remote control program using the graphic interface shown below. Refer to Section 8 for details on remote access to the T400 analyzer.

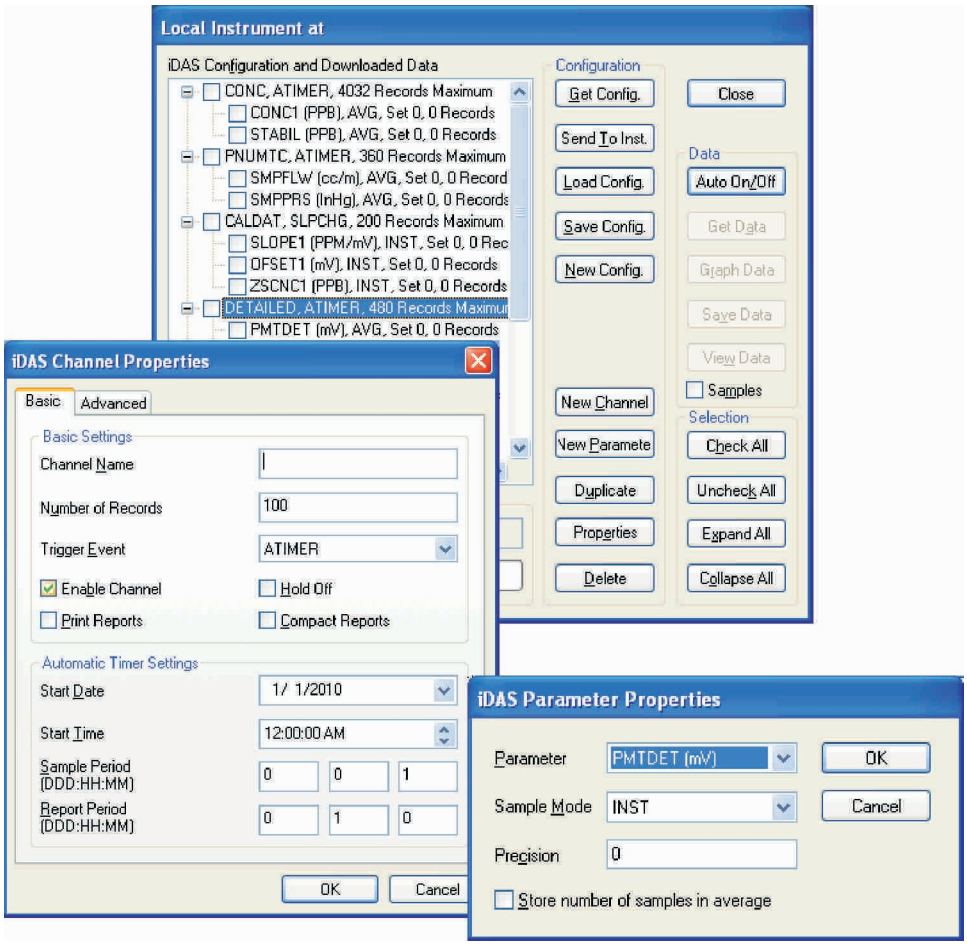

Figure 7-2: APICOM User Interface for Configuring the DAS.

Once a DAS configuration is edited (which can be done offline and without interrupting DAS data collection), it is conveniently uploaded to the instrument and can be stored on a computer for later review, alteration or documentation and archival. Refer to the APICOM manual for details on these procedures. The APICOM user manual (Teledyne API part number 039450000) is included in the APICOM installation file, which can be downloaded at http://www.teledyne-api.com/software/apicom/.

7.7. DAS CONFIGURATION LIMITS

The number of DAS objects are limited by the instrument's finite storage capacity. For information regarding the maximum number of channels, parameters, and records and how to calculate the file size for each data channel, refer to the DAS manual downloadable from the TAPI website at http://www.teledyne-api.com/manuals/ under Special Manuals.

8. REMOTE OPERATION

This section provides information needed when using external digital and serial I/O for remote operation. It assumes that the electrical connections have been made as described in Section 3.3.1.

The T400 can be remotely configured, calibrated or queried for stored data through the rear serial ports, via either **Computer mode** (using a personal computer) or **Interactive mode** (using a terminal emulation program).

8.1. COMPUTER MODE

Computer mode is used when the analyzer is connected to a computer with a dedicated interface program such as APICOM.

8.1.1. REMOTE CONTROL VIA APICOM

APICOM is an easy-to-use, yet powerful interface program that allows a user to access and control any of Teledyne API's main line of ambient and stack-gas instruments from a remote connection through direct cable, modem or Ethernet. Running APICOM, a user can:

- Establish a link from a remote location to the analyzer through direct cable connection via RS-232 modem or Ethernet.
- View the instrument's front panel and remotely access all functions that could be accessed manually on the instrument.
- Remotely edit system parameters and set points.
- Download, view, graph and save data for predictive diagnostics or data analysis.
- Retrieve, view, edit, save and upload DAS configurations (Section 7).
- Check on system parameters for trouble-shooting and quality control.

APICOM is very helpful for initial setup, data analysis, maintenance and troubleshooting. Refer to the APICOM manual available for download from http://www.teledyne-api.com/software/apicom/.

8.2. INTERACTIVE MODE

Interactive mode is used with a terminal emulation program or a "dumb" computer terminal.

8.2.1. REMOTE CONTROL VIA A TERMINAL EMULATION PROGRAM

Start a terminal emulation program such as HyperTerminal. All configuration commands must be created following a strict syntax or be pasted in from an existing text file, which was edited offline and then uploaded through a specific transfer procedure. The commands that are used to operate the analyzer in this mode are listed in Table 8-1 and Appendix A.

8.2.1.1. Help Commands in Interactive Mode

Table 8-1: Terminal Mode Software Commands

COMMAND	Function
Control-T	Switches the analyzer to terminal mode (echo, edit). If mode flags 1 & 2 are OFF, the interface can be used in interactive mode with a terminal emulation program.
Control-C	Switches the analyzer to computer mode (no echo, no edit).
CR (carriage return)	A carriage return is required after each command line is typed into the terminal/computer. The command will not be sent to the analyzer to be executed until this is done. On personal computers, this is achieved by pressing the ENTER button.
BS (backspace)	Erases one character to the left of the cursor location.
ESC (escape)	Erases the entire command line.
?[ID] CR	This command prints a complete list of available commands along with the definitions of their functionality to the display device of the terminal or computer being used. The ID number of the analyzer is only necessary if multiple analyzers are on the same communications line, such as the multi-drop setup.

8.2.1.2. **Command Syntax**

Commands are not case-sensitive and all arguments within one command (i.e. ID numbers, buttonwords, data values, etc.) must be separated with a space character.

All Commands follow the syntax:

X [ID] COMMAND <CR>

Where

X	is the command type (one letter) that defines the type of command. Allowed designators are listed in Table 8-2 and Appendix A-6.
[ID]	is the machine identification number (Section 5.7.1). Example: the Command "? 700" followed by a carriage return would print the list of available commands for the revision of software currently installed in the instrument assigned ID Number 700.
COMMAND	is the command designator: This string is the name of the command being issued (LIST, ABORT, NAME, EXIT, etc.). Some commands may have additional arguments that define how the command is to be executed. Press ? <CR> or refer to Appendix A-6 for a list of available command designators.
<CR>	is a carriage return. All commands must be terminated by a carriage return (usually achieved by pressing the ENTER button on a computer).

Table 8-2: Teledyne API Serial I/O Command Types

COMMAND	COMMAND TYPE
C	Calibration
D	Diagnostic
L	Logon
T	Test measurement
V	Variable
W	Warning

8.2.1.3. **Data Types**

Data types consist of integers, hexadecimal integers, floating-point numbers, Boolean expressions and text strings.

Integer data are used to indicate integral quantities such as a number of records, a filter length, etc.

- They consist of an optional plus or minus sign, followed by one or more digits.
- For example, *+1*, *-12*, *123* are all valid integers.

Hexadecimal integer data are used for the same purposes as integers.

- They consist of the two characters "0x," followed by one or more hexadecimal digits (0-9, A-F, a-f), which is the 'C' programming language convention.
- No plus or minus sign is permitted.
- For example, *0x1*, *0x12*, *0x1234abcd* are all valid hexadecimal integers.

Floating-point numbers are used to specify continuously variable values such as temperature set points, time intervals, warning limits, voltages, etc.

- They consist of an optional plus or minus sign, followed by zero or more digits, an optional decimal point, and zero or more digits.
- At least one digit must appear before or after the decimal point.
- Scientific notation is not permitted.
- For example, *+1.0*, *1234.5678*, *-0.1*, *1* are all valid floating-point numbers.

Boolean expressions are used to specify the value of variables or I/O signals that may assume only two values.

- They are denoted by the keywords *ON* and *OFF*.

Text strings are used to represent data that cannot be easily represented by other data types, such as data channel names, which may contain letters and numbers.

- They consist of a quotation mark, followed by one or more printable characters, including spaces, letters, numbers, and symbols, and a final quotation mark.
- For example, *"a"*, *"1"*, *"123abc"*, and *"()[]<>"* are all valid text strings.
- It is not possible to include a quotation mark character within a text string.

Some commands allow you to access variables, messages, and other items, such as DAS data channels, by name. When using these commands,

- you must type the entire name of the item
- you cannot abbreviate any names

8.2.1.4. **Status Reporting**

Reporting of status messages as an audit trail is one of the three principal uses for the RS-232 interface (the other two being the command line interface for controlling the instrument and the download of data in electronic format). You can effectively disable the reporting feature by setting the interface to Quiet mode (Section 6.2.1, Table 6-1).

Status reports include warning messages, calibration and diagnostic status messages. Refer to Appendix A for a list of the possible messages, and this for information on controlling the instrument through the RS-232 interface.

GENERAL MESSAGE FORMAT

All messages from the instrument (including those in response to a command line request) are in the format:

X DDD:HH:MM [Id] MESSAGE<CRLF>

Where:

X	is a command type designator, a single character indicating the message type, as shown in the Table 8-2.
DDD:HH:MM	is the time stamp, the date and time when the message was issued. It consists of the Day-of-year (DDD) as a number from 1 to 366, the hour of the day (HH) as a number from 00 to 23, and the minute (MM) as a number from 00 to 59.
[ID]	is the analyzer ID, a number with 1 to 4 digits.
MESSAGE	is the message content that may contain warning messages, test measurements, variable values, etc.
<CRLF>	is a carriage return / line feed pair, which terminates the message.

The uniform nature of the output messages makes it easy for a host computer to parse them into an easy structure. Keep in mind that the front panel display does not give any information on the time a message was issued, hence it is useful to log such messages for trouble-shooting and reference purposes. Terminal emulation programs such as HyperTerminal can capture these messages to text files for later review.

8.3. REMOTE ACCESS BY MODEM

The T400 can be connected to a modem for remote access. This requires a cable between the analyzer's COM port and the modem, typically a DB-9F to DB-25M cable (available from Teledyne API with part number WR0000024).

Once the cable has been connected, check to make sure:

- DTE-DCE switch is in the DCE position.
- T400 COM port is set for a baud rate that is compatible with the modem.
- Modem is designed to operate with an 8-bit word length with one stop bit.
- The **MODEM ENABLE** communication mode is turned **ON** (Mode 64, see Section 6.2.1).

Once this is completed, the appropriate setup command line for your modem can be entered into the analyzer. The default setting for this feature is

AT Y0 &D0 &H0 &I0 S0=2 &B0 &N6 &M0 E0 Q1 &W0

This string can be altered to match your modem's initialization and can be up to 100 characters long.

To change this setting press:

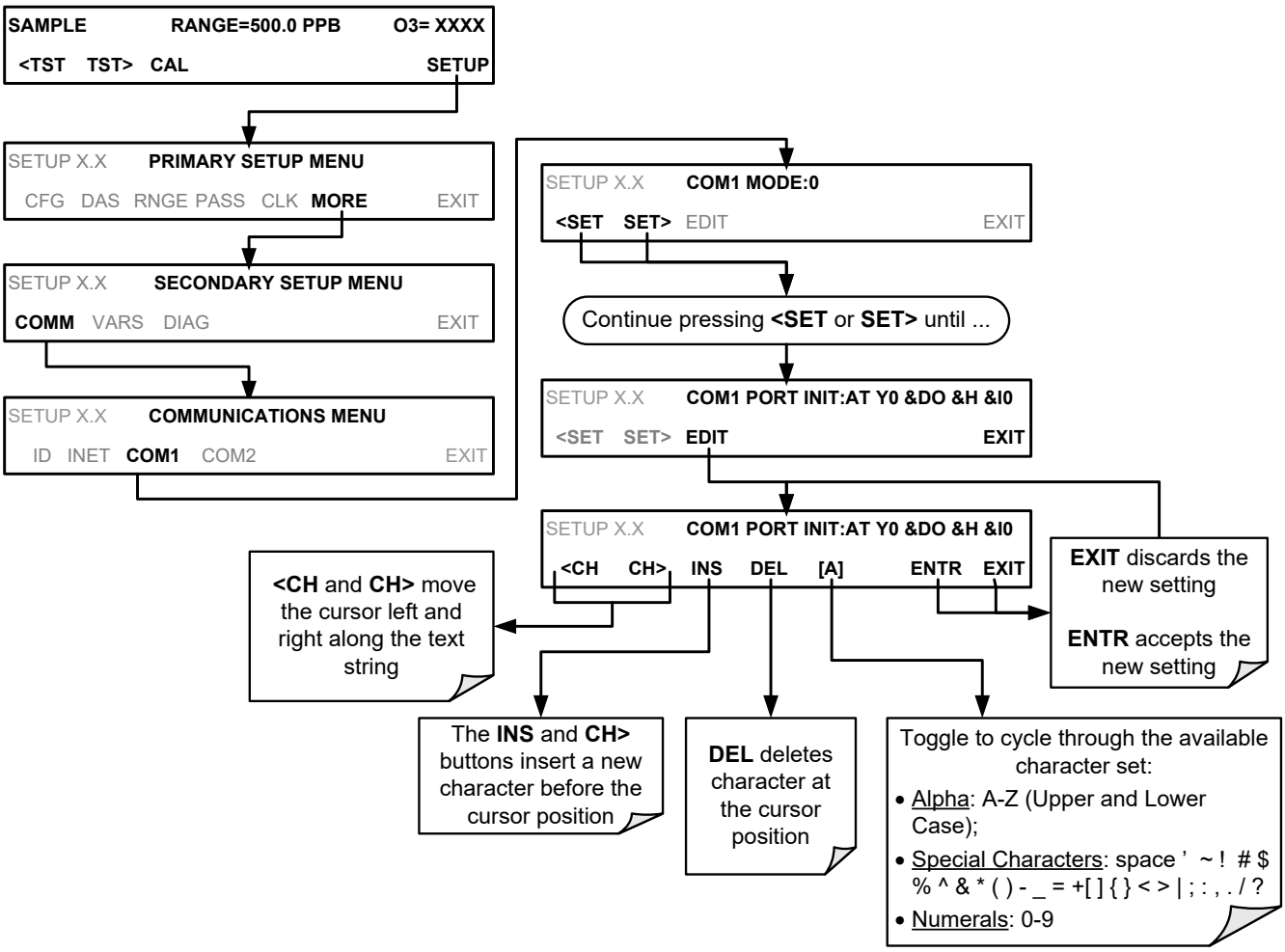

To initialize the modem press:

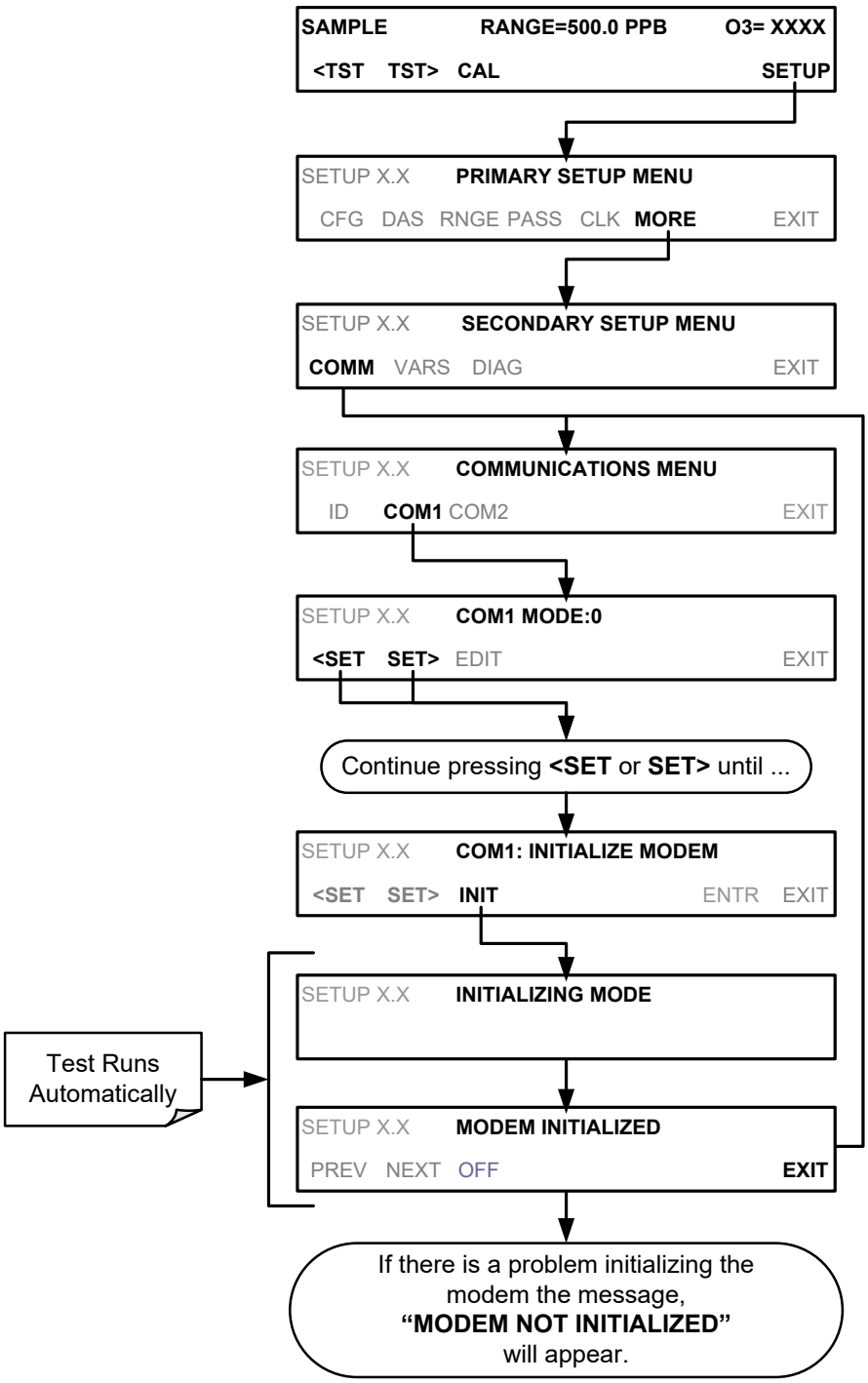

8.4. PASSWORD SECURITY FOR SERIAL REMOTE COMMUNICATIONS

In order to provide security for remote access of the T400, a **LOGON** feature can be enabled to require a password before the instrument will accept commands. This is done by turning on the **SECURITY MODE** (Mode 4, Section 6.2.1). Once the **SECURITY MODE** is enabled, the following items apply:

- A password is required before the port will respond or pass on commands.
- If the port is inactive for one hour, it will automatically log off, which can also be achieved with the **LOGOFF** command.
- Three unsuccessful attempts to log on with an incorrect password will cause subsequent logins to be disabled for 1 hour, even if the correct password is used.
- If not logged on, the only active command is the '?' request for the help screen.
- The following messages will be returned at logon:
  - **LOGON SUCCESSFUL** - Correct password given
  - **LOGON FAILED** - Password not given or incorrect
  - **LOGOFF SUCCESSFUL** - Connection terminated successfully

To log on to the T400 analyzer with **SECURITY MODE** feature enabled, type:

LOGON 940331

940331 is the default password. To change the default password, use the variable **RS232_PASS** issued as follows:

V RS232_PASS=NNNNNN

Where N is any numeral between 0 and 9.

8.5. APICOM REMOTE CONTROL PROGRAM

APICOM is an easy-to-use, yet powerful interface program that allows the user to access and control any of Teledyne API's main line of ambient and stack-gas instruments from a remote connection through direct cable, modem or Ethernet. Running APICOM, a user can:

- Establish a link from a remote location to the T400 through direct cable connection via RS-232 modem or Ethernet.
- View the instrument's front panel and remotely access all functions that could be accessed when standing in front of the instrument.
- Remotely edit system parameters and set points.
- Download, view, graph and save data for predictive diagnostics or data analysis.
- Check on system parameters for trouble-shooting and quality control.

APICOM is very helpful for initial setup, data analysis, maintenance and trouble-shooting. Figure 8-1 shows examples of APICOM's main interface, which emulates the look and functionality of the instrument's actual front panel

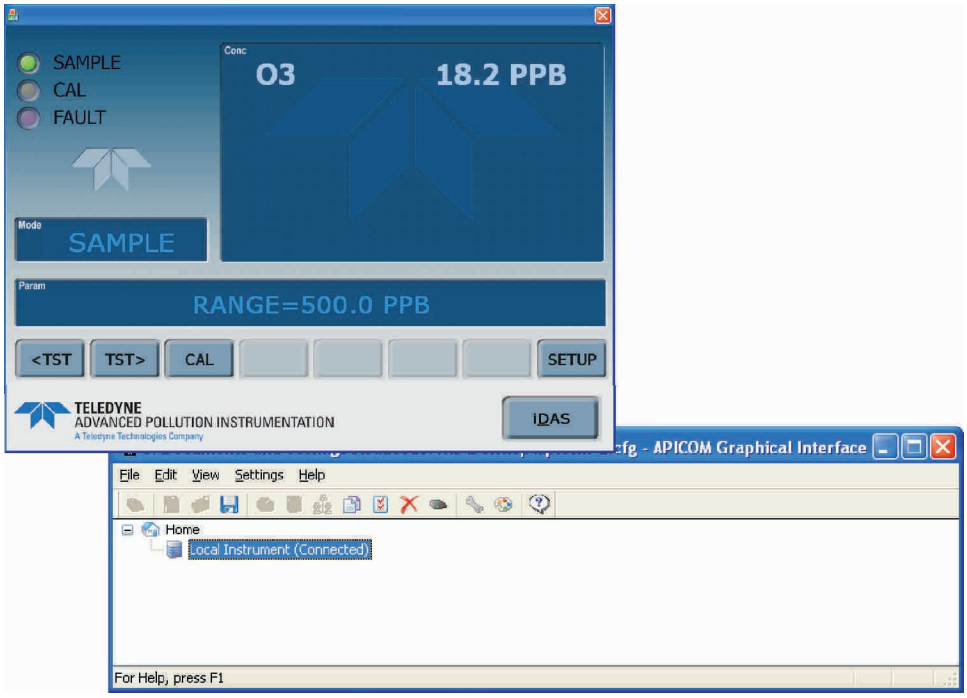

Figure 8-1: APICOM Remote Control Program Interface

Note

APICOM is included at no additional cost with the analyzer, and the latest versions can also be downloaded also at no additional cost at http://www.teledyne-api.com/software/apicom/.

9. T400 CALIBRATION PROCEDURES

This section contains a variety of information regarding the various methods for calibrating a Model T400 Ozone Analyzer as well as other supporting information. This section is organized as follows:

SECTION 9.1 – Before Calibration

This section contains general information you should know before about calibrating the analyzer.

SECTION 9.2 – Basic Manual Calibration Checks and Calibration of the Analyzer

This section describes the procedure for checking the calibrating and calibrating the instrument with no zero/span valves installed or if installed, not operating. It requires that zero air and span gas is inlet through the **SAMPLE** port.

Also included are instructions for selecting the reporting range to be calibrated when the T400 analyzer is set to operate in either the **DUAL** range or **AUTO** range modes.

SECTION 9.3 – Manual Calibration Check and Calibration with Valve Options

This section describes:

- The procedure for checking the calibration of the instrument with zero/span valves or the IZS option installed and operating but controlled manually through the touchscreen on the Front Panel of the instrument.
- The procedure for calibrating of the instrument with zero/span valves and operating but controlled manually through the touchscreen on the front panel of the instrument.
- Instructions on activating the zero/span valves via the control in contact closures of the analyzers external digital I/O.

SECTION 9.4 – Automatic Zero/Span Cal/Check (AutoCal)

This section describes the procedure for using the AutoCal feature of the analyzer to check or calibrate the instrument. The AutoCal feature requires that either the zero/span valve option or the internal zero/span (IZS) option be installed and operating.

SECTION 9.5 – O3 Photometer Electronic Calibration

This section describes how to calibrate inherent electronic offsets that may be affecting the performance of the T400 analyzer's internal photometer.

SECTION 9.6 – Calibrating the IZS Option O3 Generator

This section describes how to check the performance of the O_3 generator that is included in the IZS option (OPT – 50G; see Section 3.6.2) available for the T400 analyzer.

Note **Throughout this Section are various diagrams showing pneumatic connections between the T400 and various other pieces of equipment such as calibrators and zero air sources. These diagrams are only intended to be schematic representations of these connections and do not reflect actual physical locations of equipment and fitting location or orientation. Contact your regional EPA or other appropriate governing agency for more detailed recommendations.**

9.1. BEFORE CALIBRATION

Note **If any problems occur while performing the following calibration procedures, refer to Section 11 of this manual for troubleshooting tips.**

9.1.1. REQUIRED EQUIPMENT, SUPPLIES, AND EXPENDABLES

Calibration of the Model T400 O_3 Analyzer requires certain amount of equipment and supplies. These include, but are not limited to, the following:

- Zero-air source
- Ozone span gas source
- Gas lines - All gas lines should be PTFE (Teflon) or FEP
- A recording device such as a strip-chart recorder and/or data logger (optional)

9.1.2. ZERO AIR AND SPAN GAS

To perform the following calibration you must have sources for zero air and span gas available.

ZERO AIR is similar in chemical composition to the Earth's atmosphere but scrubbed of all components that might affect the analyzers readings. For O_3 measuring devices, zero air should be:

- Devoid of O_3 and Mercury Vapor, and;
- Have a dew point of -20°C.

Devices that condition ambient air by drying and removing any pollutants, such as the Teledyne API' Model 701 Zero Air Module, are ideal for producing Zero Air.

Span Gas is a gas specifically mixed to match the chemical composition of the type of gas being measured at near full scale of the desired measurement range. It is recommended that the span gas used have a concentration equal to 80% of the full measurement range.

EXAMPLE: If the application is to measure between 0 ppm and 500 ppb, an appropriate span gas would be 400 ppb.

EXAMPLE: If the application is to measure between 0 ppb and 1000 ppb, an appropriate Span Gas would be 800 ppb.

Because of the instability of O_3, it is impractical, if not impossible, to produce stable concentrations of bottled, pressurized O_3. Therefore, when varying concentrations of O_3 is required for span calibrations they must be generated locally. We recommend using a gas dilution calibrator with a built in O_3 generator, such as a Teledyne API Model 700E or T700, as a source for O_3 span gas.

All equipment used to produce calibration gasses should be verified against EPA / NIST traceable standards.

9.2. BASIC MANUAL CALIBRATION CHECKS AND CALIBRATION OF THE ANALYZER

Note

ZERO/SPAN CALIBRATION CHECKS VS. ZERO/SPAN CALIBRATION

Pressing the ENTR button during the following procedure resets the stored values for OFFSET and SLOPE and alters the instrument's Calibration. For ZERO /Span Calibration see Section 9.2.3.

9.2.1. SETUP FOR BASIC CALIBRATION CHECKS AND CALIBRATION OF THE T400 ANALYZER

Connect the Sources of Zero Air and Span Gas as shown below.

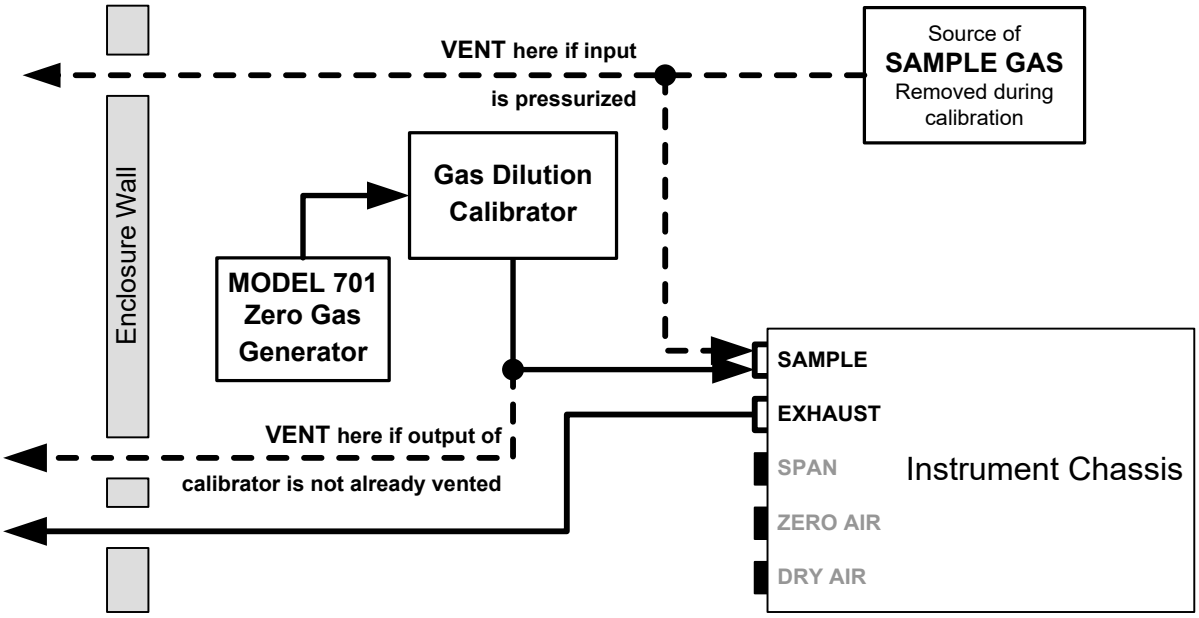

Figure 9-1: Pneumatic Connections for Manual Calibration Checks without Z/S Valve or IZS Options

9.2.2. PERFORMING A BASIC MANUAL CALIBRATION CHECK

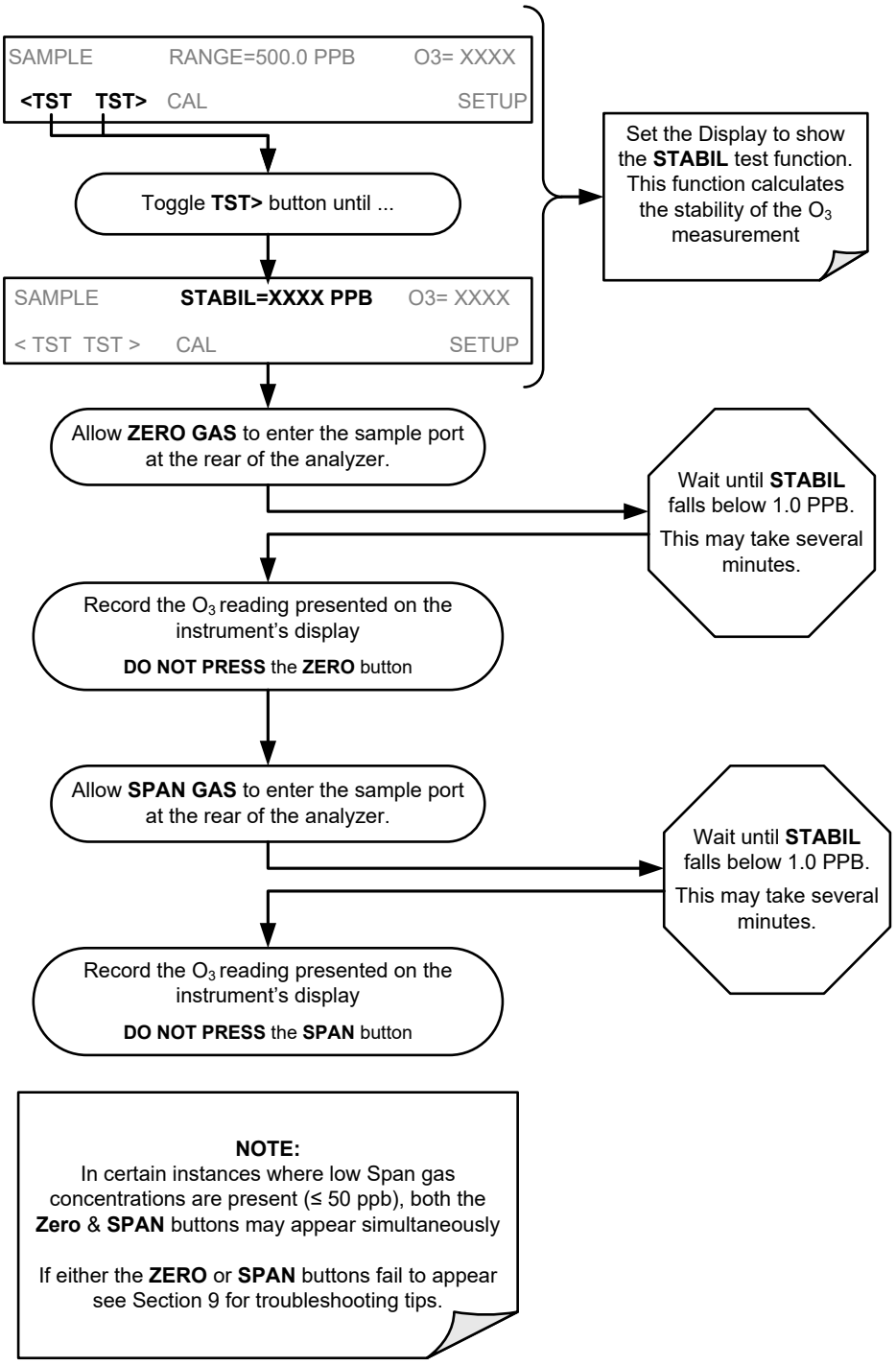

Note **If the ZERO or SPAN buttons are not displayed, the measurement made during is out of the allowable range allowed for a reliable calibration. See Section 11 for troubleshooting tips.**

9.2.3. PERFORMING A BASIC MANUAL CALIBRATION

9.2.3.1. Setting the Expected O_3 Span Gas Concentration

Note **It is important to verify the *precise* O_3 Concentration Value of the SPAN gas independently.**

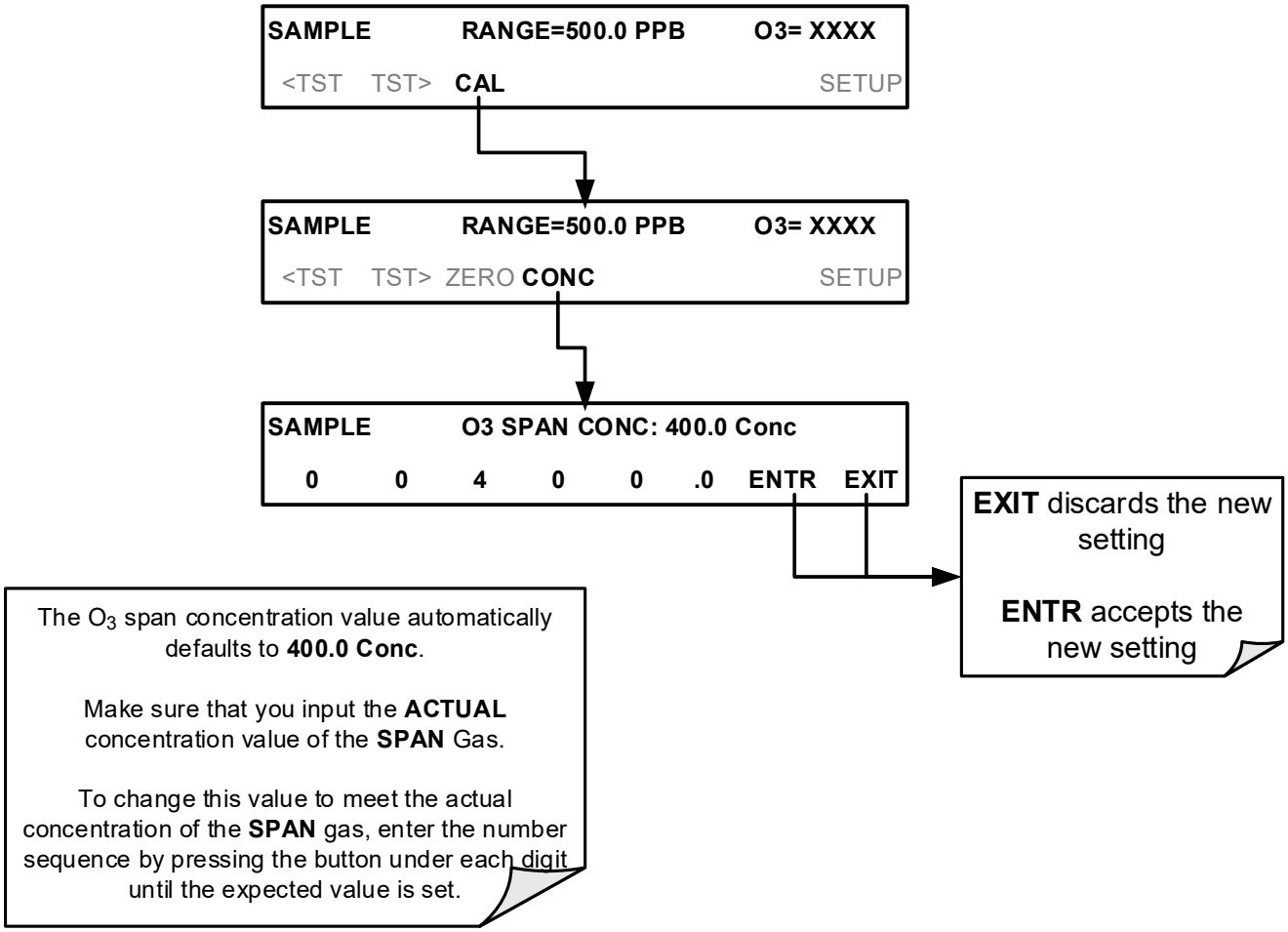

9.2.3.2. **Zero/Span Point Calibration Procedure**

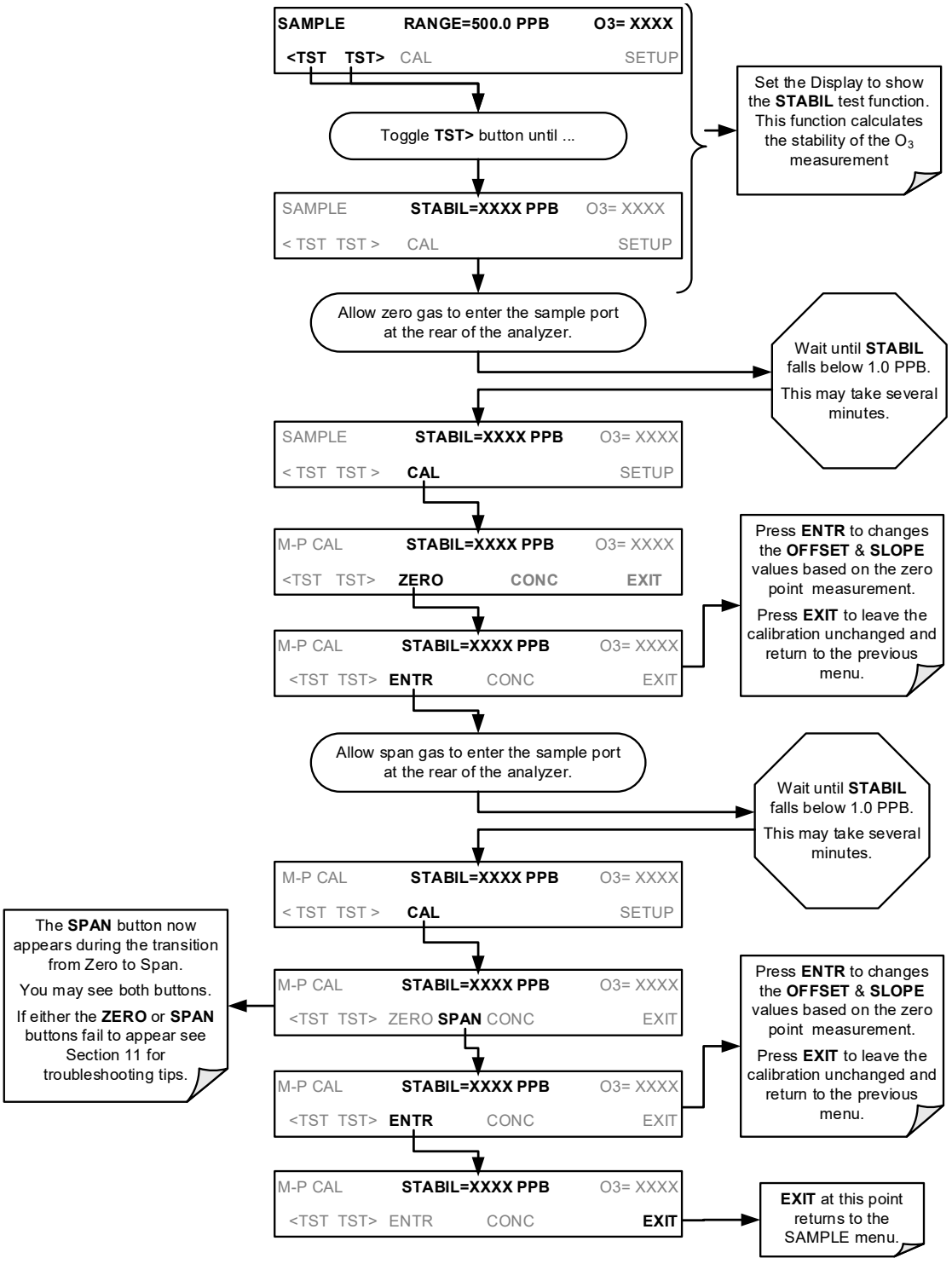

Note **If the ZERO or SPAN buttons are not displayed, the measurement made during the procedure is out of the allowable range allowed for a reliable calibration. See Section 11 for troubleshooting tips.**

9.2.4. MANUAL CALIBRATION CHECKS AND CALIBRATIONS USING AUTO RANGE OR DUAL RANGE MODES

If the analyzer is being operated in **DUAL** range mode or **AUTO** range mode, then the **HIGH** and **LOW** ranges must be independently checked.

When the analyzer is in either **DUAL** or **AUTO** Range modes, the user must run a separate calibration procedure for each range. After pressing the **CAL**, **CALZ** or **CALS** button, the user is prompted for the range that is to be calibrated as seen in the **CALZ** example below:

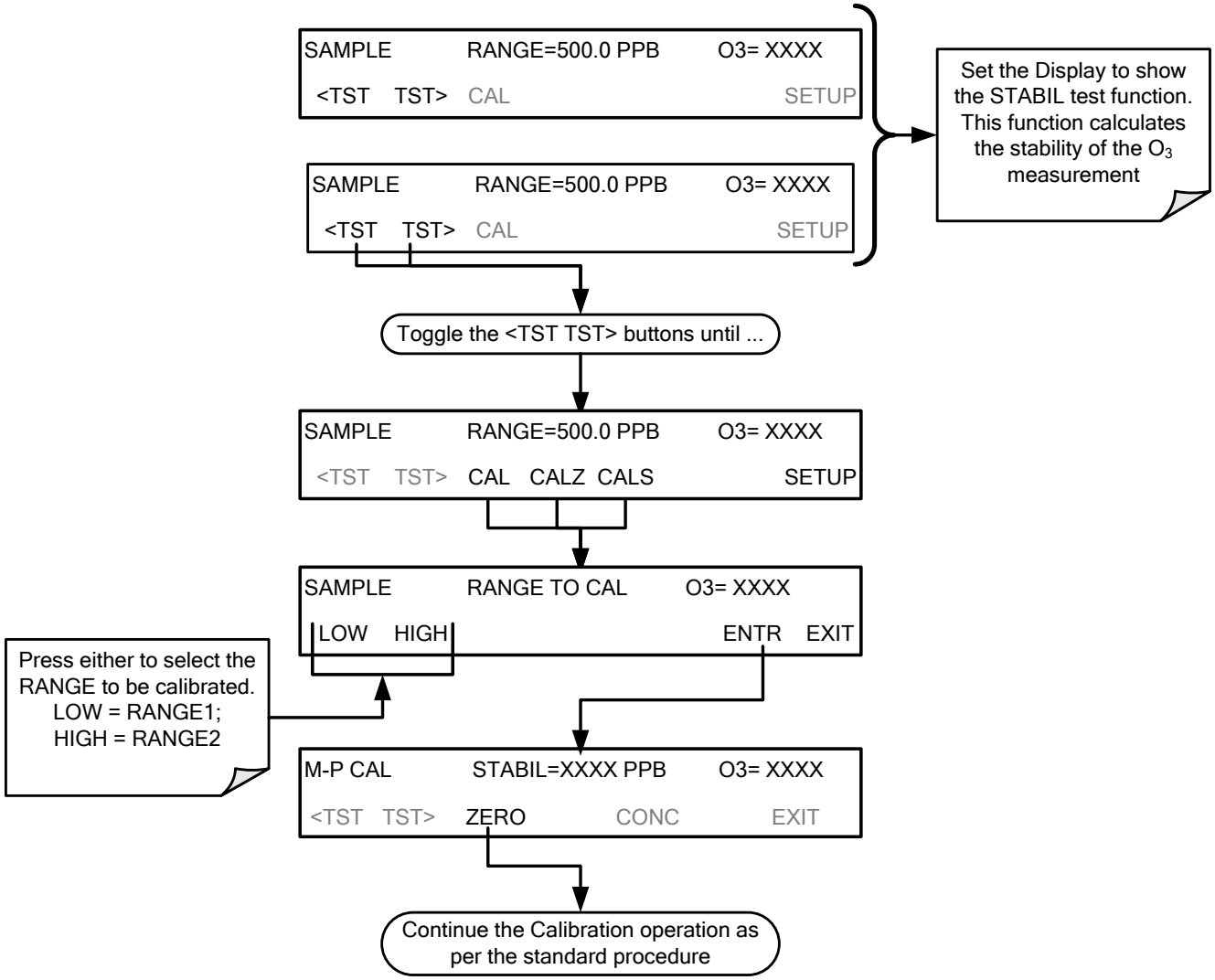

Note **Once this selection is made, the calibration procedure continues as described in Section 9.2. The other range may be calibrated by starting over from the main SAMPLE display.**

9.3. MANUAL CALIBRATION CHECK AND CALIBRATION WITH VALVE OPTIONS

9.3.1. SETUP FOR CALIBRATION CHECKS AND CALIBRATION WITH VALVE OPTIONS

Connect the sources of zero air and span gas as shown in Figure 9-2 and Figure 9-3.

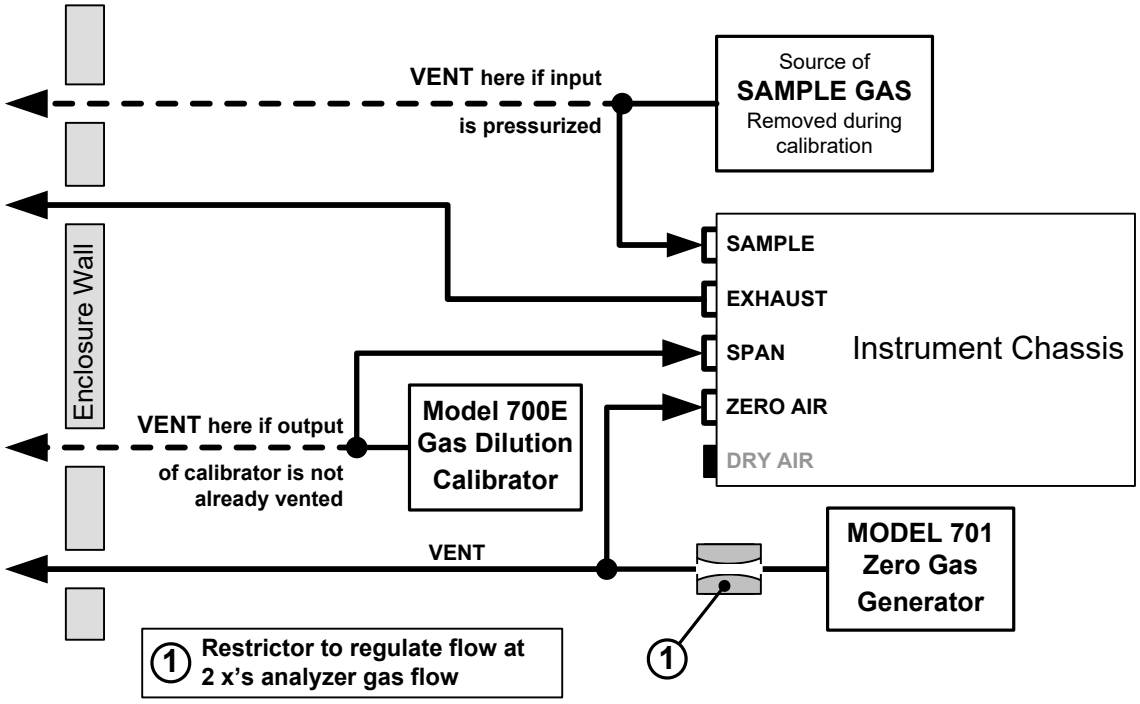

Figure 9-2: Gas Line Connections for the T400 Analyzer with Zero/Span Valve Option (OPT-50A)

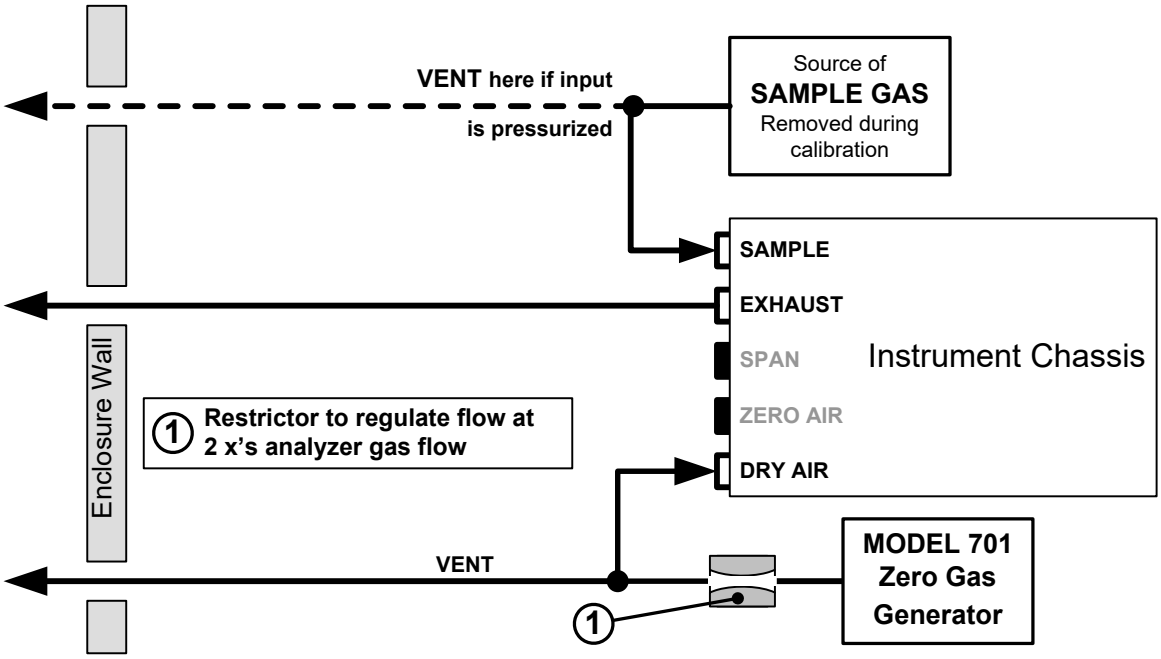

Figure 9-3: Gas Line Connections for the T400 Analyzer with IZS Options (OPT-50G)

9.3.2. MANUAL CALIBRATION CHECKS WITH VALVE OPTIONS INSTALLED

Performing the calibration checks on T400 analyzer's with the Valve option installed is similar to that described in Section 9.2, except that the **ZERO** And **SPAN** calibration operations are initiated directly and independently with dedicated buttons (**CALZ** & **CALS**).

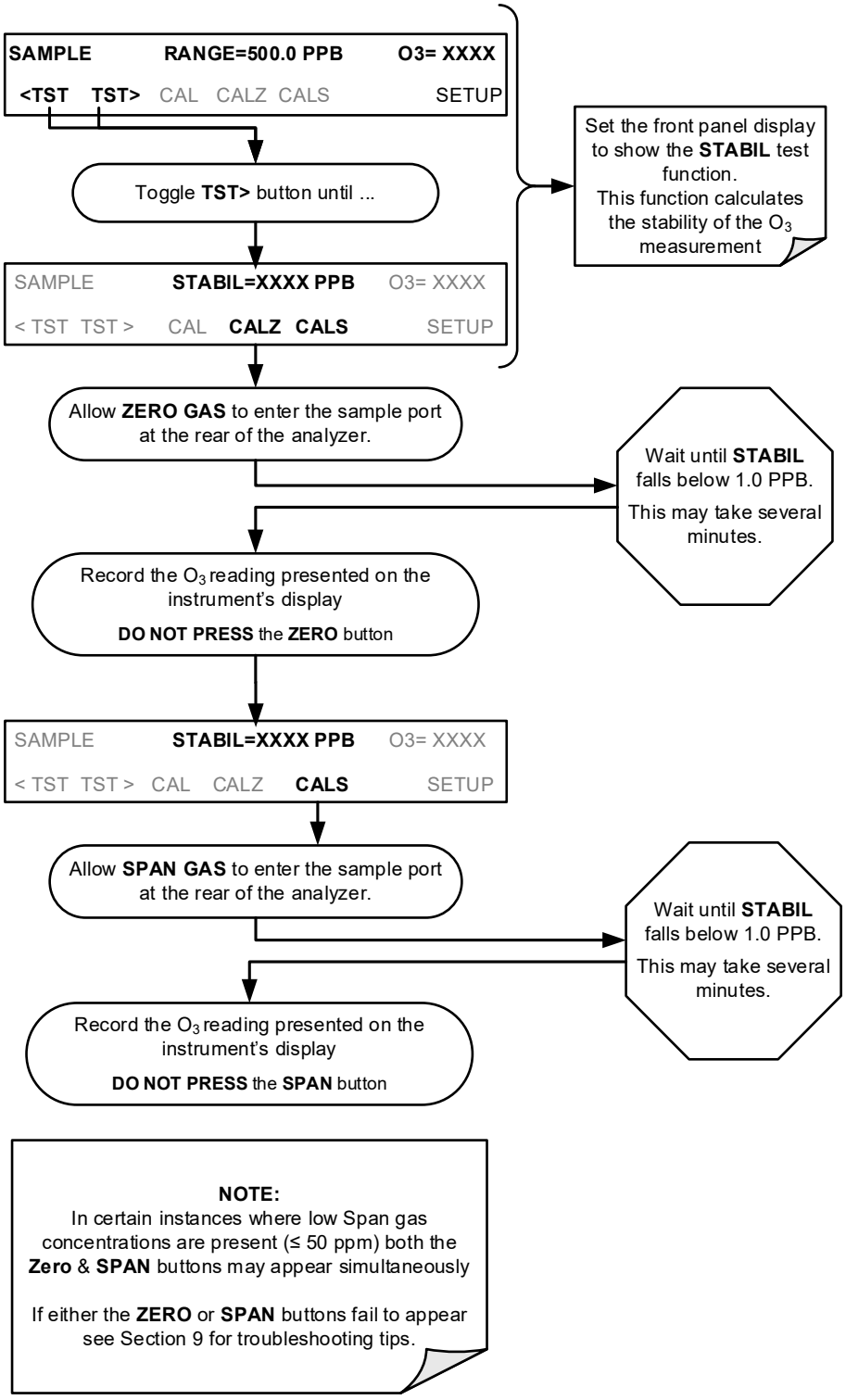

9.3.3. MANUAL CALIBRATION USING VALVE OPTIONS

Note **While the internal Zero Span Option is a convenient tool for performing Calibration Checks, its O_3 generator is not stable enough to be used as a source of Zero Air or Span Gas for calibrating the instrument. Calibrations should ONLY be performed using external sources of Zero Air and Span Gas whose accuracy is traceable to EPA or NIST standards.**

On instruments with Z/S valve options, zero air and span gas is supplied to the analyzer through the zero gas and span gas inlets (see Figure 9-2 and the zero and cal operations are initiated directly and independently with dedicated buttons (**CALZ** & **CALS**).

9.3.3.1. Setting the Expected O_3 Span Gas Concentration with the Z/S Option Installed

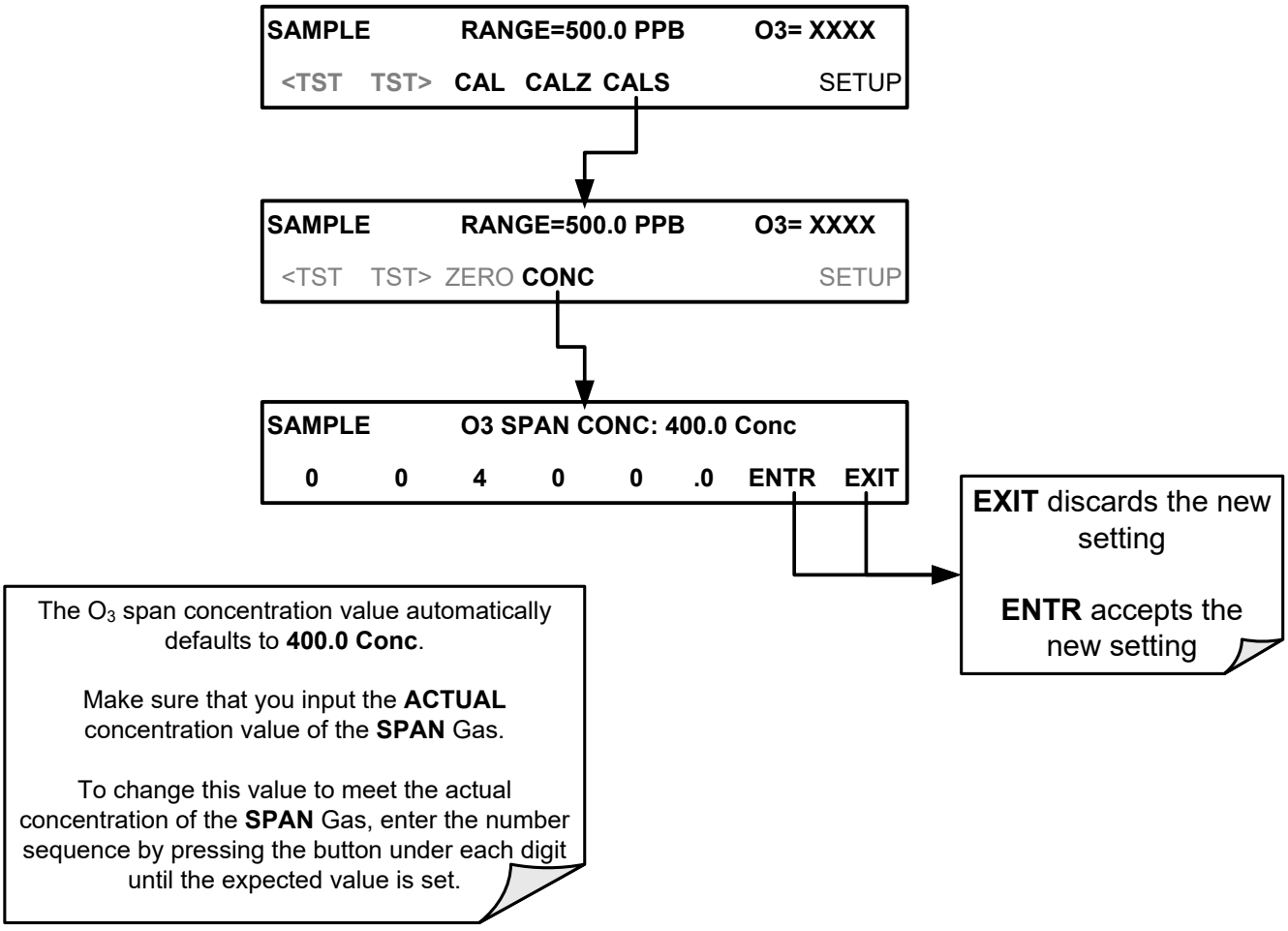

9.3.3.2. **Zero/Span Point Calibration Procedure the Z/S Option Installed**

If the T400 analyzer is set for either the **AUTO** or **DUAL** range modes, read Section 9.2.4 before proceeding.

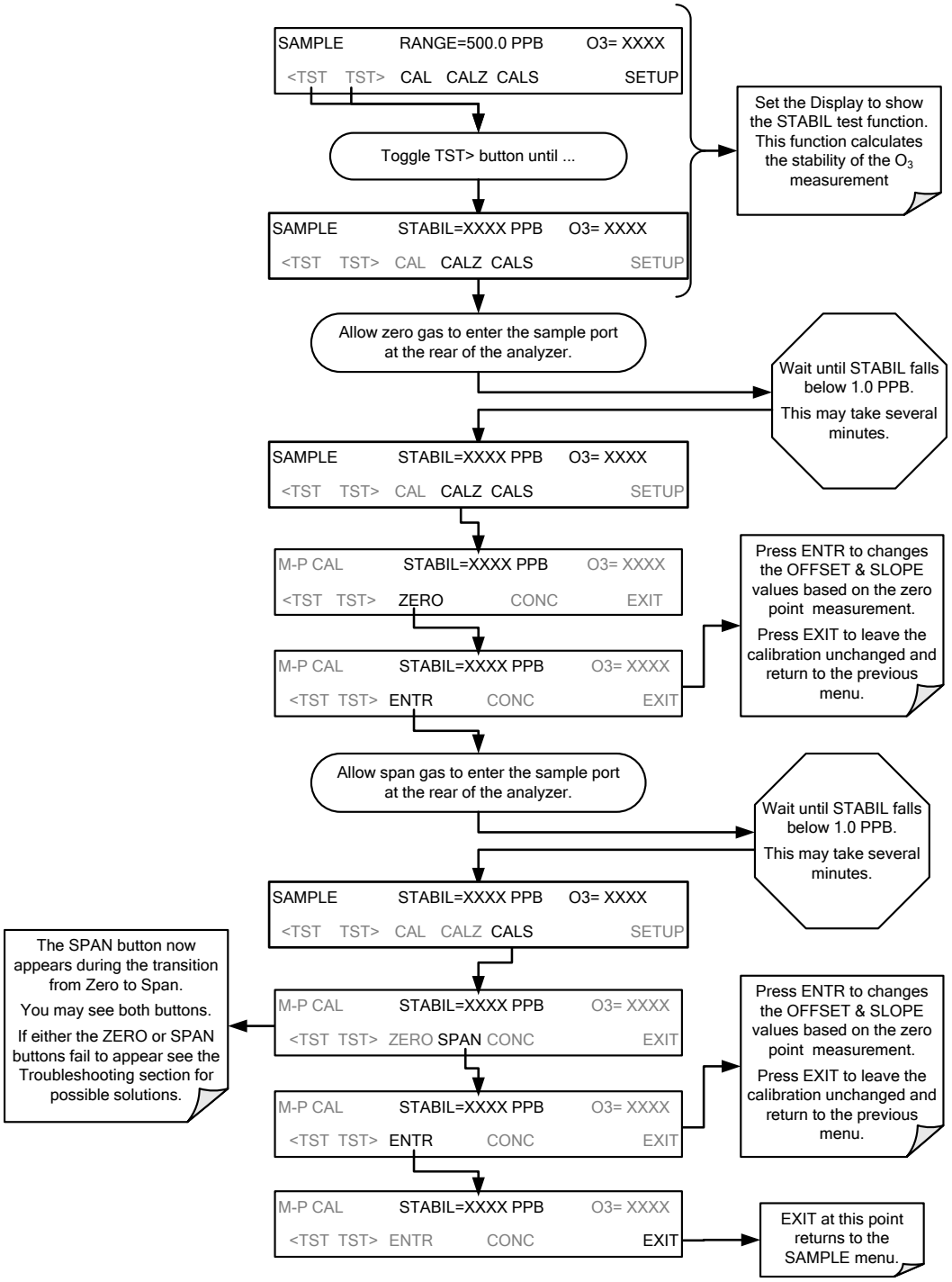

Note **If the ZERO or SPAN buttons are not displayed, the measurement made during is out of the allowable range allowed for a reliable calibration. See Section 11 for troubleshooting tips.**

9.3.3.3. Use of Zero/Span Valve with Remote Contact Closure

Contact closures for controlling calibration and calibration checks are located on the rear panel **CONTROL IN** connector. Instructions for setup and use of these contacts are found in Section 3.3.1.6.

When the contacts are closed for at least 5 seconds, the instrument switches into zero, low span or high span mode and the internal zero/span valves will be automatically switched to the appropriate configuration.

- The remote calibration contact closures may be activated in any order.
- It is recommended that contact closures remain closed for at least 10 minutes to establish a reliable reading.
- The instrument will stay in the selected mode for as long as the contacts remain closed.

If contact closures are being used in conjunction with the analyzer's AutoCal (see Section 9.4) feature and the AutoCal attribute "**CALIBRATE"** is enabled, the T400 will not re-calibrate the analyzer until the contact is opened. At this point, the new calibration values will be recorded before the instrument returns to **SAMPLE** mode.

If the AutoCal attribute "**CALIBRATE"** is disabled, the instrument will return to **SAMPLE** mode, leaving the instrument's internal calibration variables unchanged.

9.4. AUTOMATIC ZERO/SPAN CAL/CHECK (AUTOCAL)

The AutoCal system allows unattended periodic operation of the Z**ERO/SPAN** valve options by using the T400's internal time of day clock. AutoCal operates by executing **SEQUENCES** programmed by the user to initiate the various calibration modes of the analyzer and open and close valves appropriately. It is possible to program and run up to three separate sequences (**SEQ1**, **SEQ2** and **SEQ3**). Each sequence can operate in one of three modes, or be disabled.

Table 9-1: AutoCal Modes

MODE NAME	ACTION
DISABLED	Disables the Sequence.
ZERO	Causes the Sequence to perform a Zero calibration/check.
ZERO-LO	Causes the Sequence to perform a Zero and Low (Midpoint) Span concentration calibration/check.
ZERO-HI	Causes the Sequence to perform a Zero and High Span concentration calibration/check.
ZERO-LO-HI	Causes the Sequence to perform a Zero, Low (Midpoint) Span and High Span concentration calibration/check.
LO	Causes the Sequence to perform a Low Span concentration calibration/check only.
HI	Causes the Sequence to perform a High Span concentration calibration/check only.
LO-HI	Causes the Sequence to perform a Low (Midpoint) Span and High Span concentration calibration/check but no Zero Point calibration/check.

For each mode, there are seven parameters that control operational details of the **SEQUENCE**. They are:

Table 9-2: AutoCal Attribute Setup Parameters

ATTRIBUTE NAME	ACTION
Timer Enabled	Turns on the Sequence timer.
Starting Date	Sequence will operate after Starting Date.
Starting Time	Time of day Sequence will run.
Delta Days	Number of days to skip between each Sequence execution.
Delta Time	Number of hours later each "Delta Days" Sequence is to be run.
Duration	Number of minutes the Sequence operates.
Calibrate	Enable to do a calibration – Disable to do a cal check only. MUST be set to **NO** for instruments with IZS Options installed and functioning.

The following example sets Sequence #2 to do a zero-span calibration every other day starting at 1 Am on September 4, 2001, lasting 15 minutes, without calibration. This will start ½ hour later each iteration.

Table 9-3: Example AutoCal Sequence

MODE AND ATTRIBUTE	VALUE	COMMENT
Sequence	**2**	Define Sequence #2
Mode	**ZERO-HI**	Select Zero and Span Mode
Timer Enable	**ON**	Enable the timer
Starting Date	**Sept. 4, 2001**	Start after Sept 4, 2001
Starting Time	**01:00**	First Span starts at 1:00AM
Delta Days	**2**	Do Sequence #2 every other day
Delta Time	**00:30**	Do Sequence #2 ½ hr later each day
Duration	**15.0**	Operate Span valve for 15 min
Calibrate	**NO**	Do not calibrate at end of Sequence

Note

The programmed STARTING_TIME must be a minimum of 5 minutes later than the real time clock for setting real time clock (See Section 5.6).

Avoid setting two or more sequences at the same time of the day. Any new sequence that is initiated whether from a timer, the COM ports, or the contact closure inputs will override any sequence that is in progress.

The CALIBRATE attribute must always be set to NO on analyzers with IZS Options installed and functioning.

Calibrations should ONLY be performed using external sources of Zero Air and Span Gas whose accuracy is traceable to EPA or NIST standards.

9.4.1. SETUP → ACAL: PROGRAMMING AND AUTO CAL

To program the example Sequence sequence shown in Table 9-3, press:

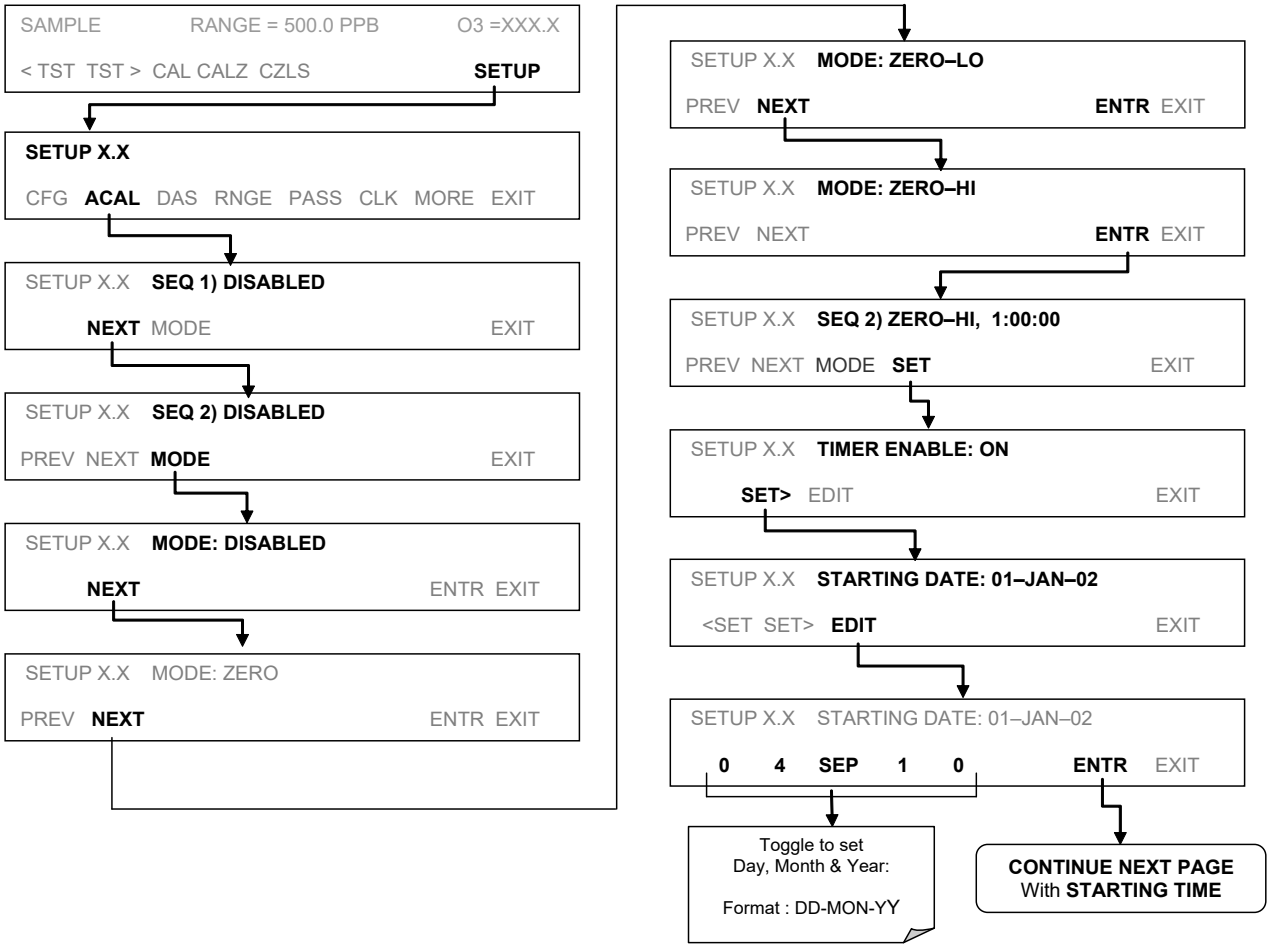

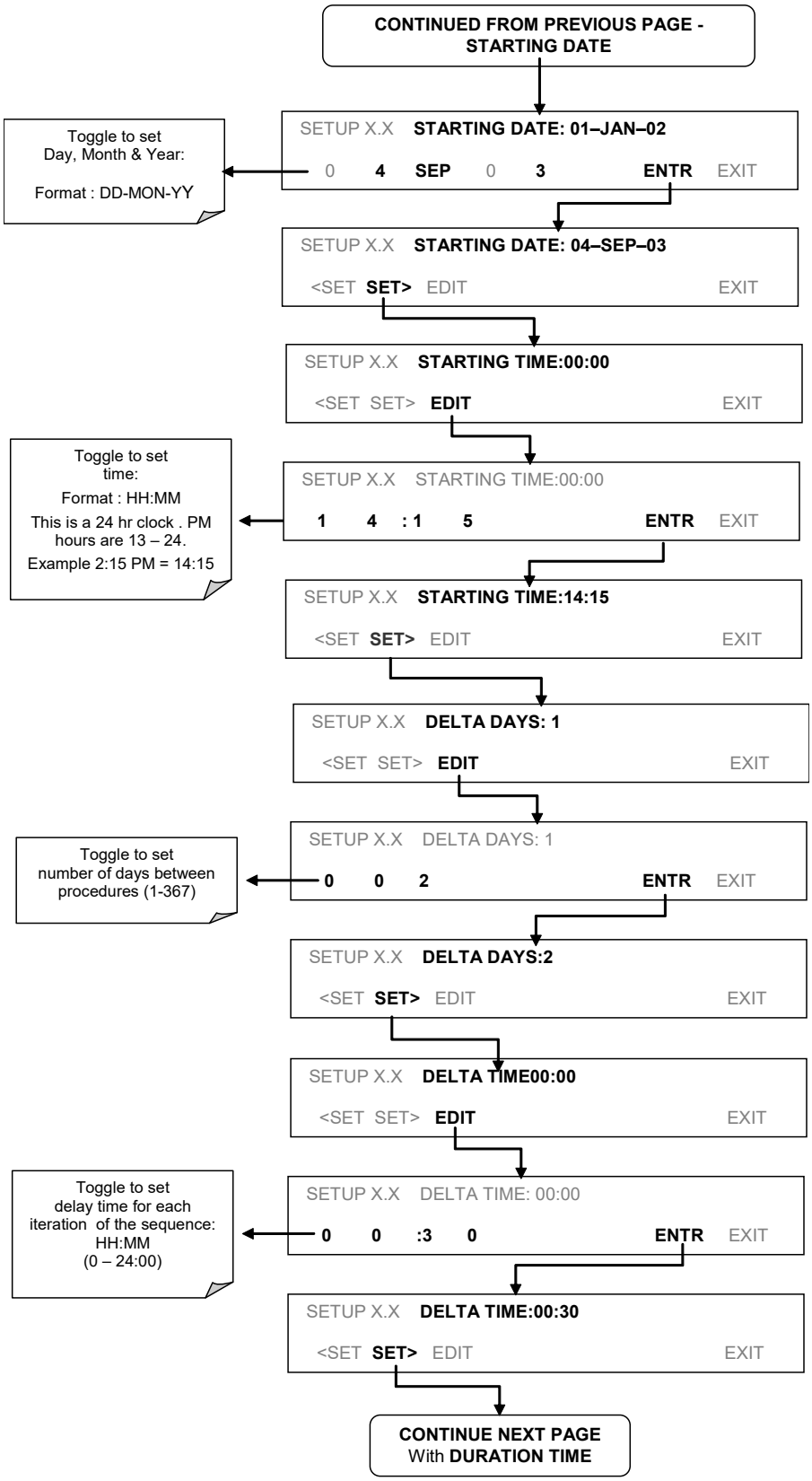
CONTINUED FROM PREVIOUS PAGE - STARTING DATE
SETUP X.X STARTING DATE: 01–JAN–02
0 4 SEP 0 3 ENTR EXIT
Toggle to set Day, Month & Year:
Format : DD-MON-YY
SETUP X.X STARTING DATE: 04–SEP–03
<SET SET> EDIT EXIT
SETUP X.X STARTING TIME:00:00
<SET SET> EDIT EXIT
Toggle to set time:
Format : HH:MM
This is a 24 hr clock . PM hours are 13 – 24.
Example 2:15 PM = 14:15
SETUP X.X STARTING TIME:00:00
1 4 : 1 5 ENTR EXIT
SETUP X.X STARTING TIME:14:15
<SET SET> EDIT EXIT
SETUP X.X DELTA DAYS: 1
<SET SET> EDIT EXIT
Toggle to set number of days between procedures (1-367)
SETUP X.X DELTA DAYS: 1
0 0 2 ENTR EXIT
SETUP X.X DELTA DAYS:2
<SET SET> EDIT EXIT
SETUP X.X DELTA TIME00:00
<SET SET> EDIT EXIT
Toggle to set delay time for each iteration of the sequence: HH:MM (0 – 24:00)
SETUP X.X DELTA TIME: 00:00
0 0 :3 0 ENTR EXIT
SETUP X.X DELTA TIME:00:30
<SET SET> EDIT EXIT
CONTINUE NEXT PAGE With DURATION TIME

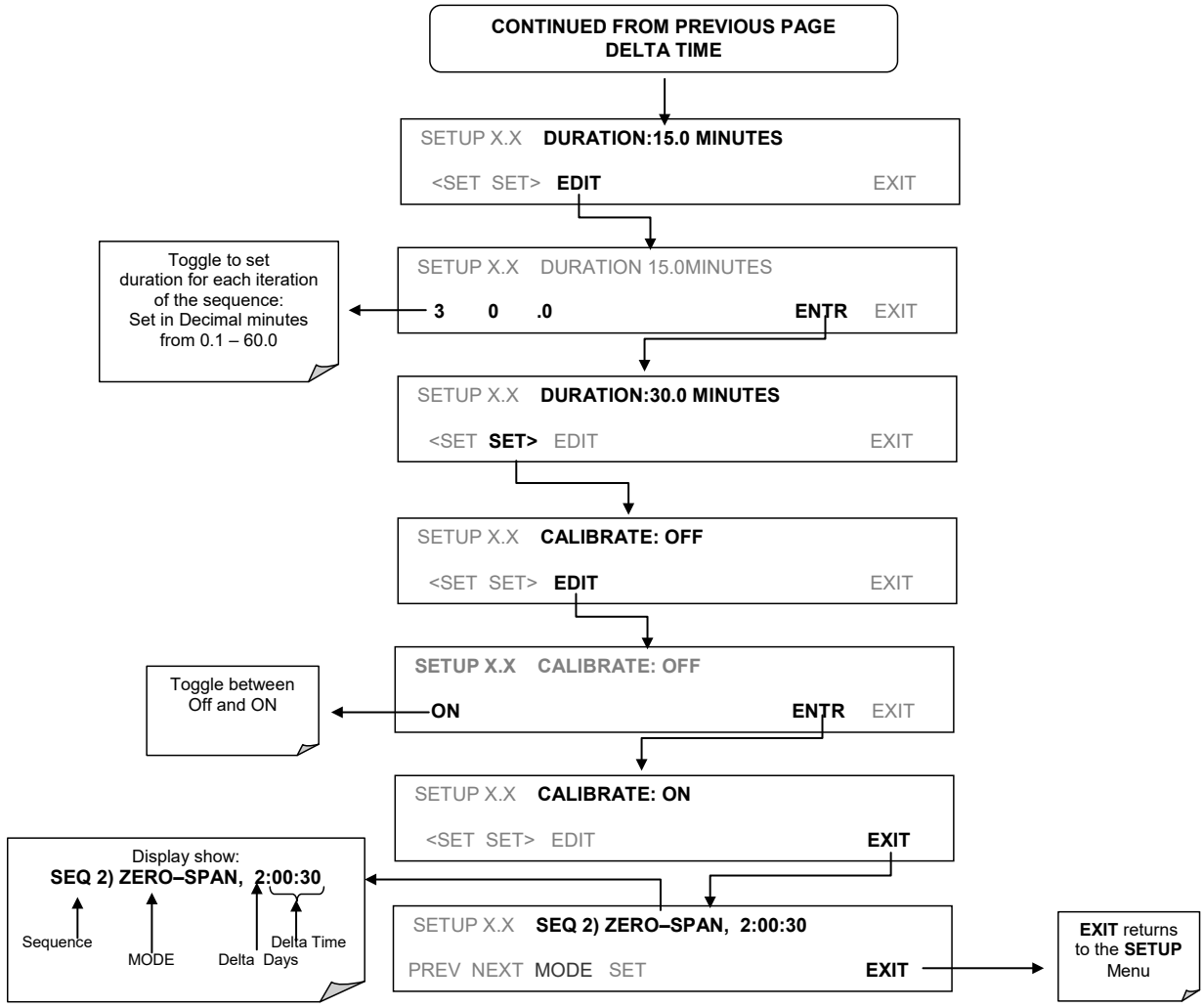

Note **If at any time an out-of-range entry is selected (Example: Delta Days > 367) the ENTR button will disappear from the display.**

9.5. O_3 PHOTOMETER ELECTRONIC CALIBRATION

There are several electronic characteristics of the T400 analyzer's photometer that may occasionally need checking or calibration.

9.5.1. PHOTOMETER DARK CALIBRATION

The dark calibration test turns off the photometer UV lamp and records any offset signal level of the UV detector-preamp-voltage-to-frequency converter circuitry. This allows the instrument to compensate for any voltage levels inherent in the Photometer detection circuit that might affect the output of the detector circuitry and therefore the calculation of O_3 concentration.

To activate the dark calibration feature, press:

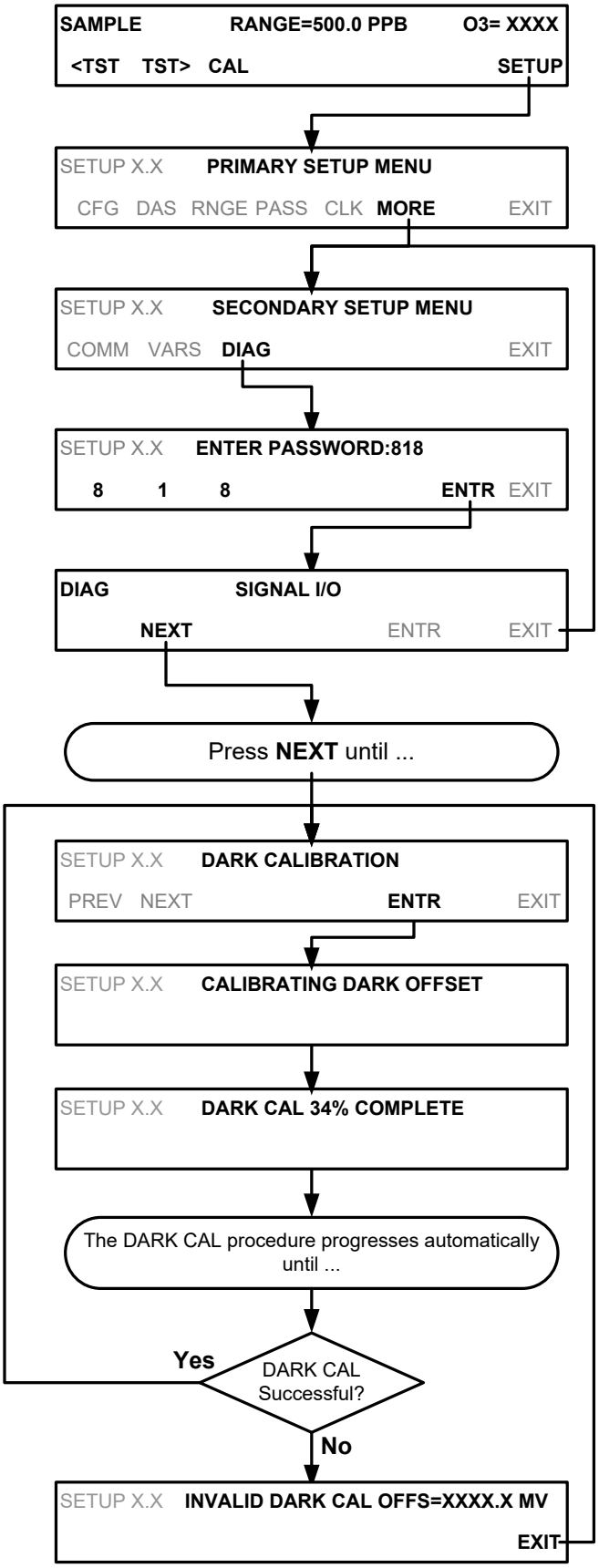

9.5.2. O_3 PHOTOMETER GAS FLOW CALIBRATION

Note **A separate flow meter is required for this procedure.**

To calibrate the flow of gas through the T400 analyzer's optional photometer bench.

1. Turn OFF the T400 analyzer.
2. Attach the flow meter directly to the SAMPLE inlet port of the analyzer.
3. Turn the analyzer ON.
4. Perform the following steps:

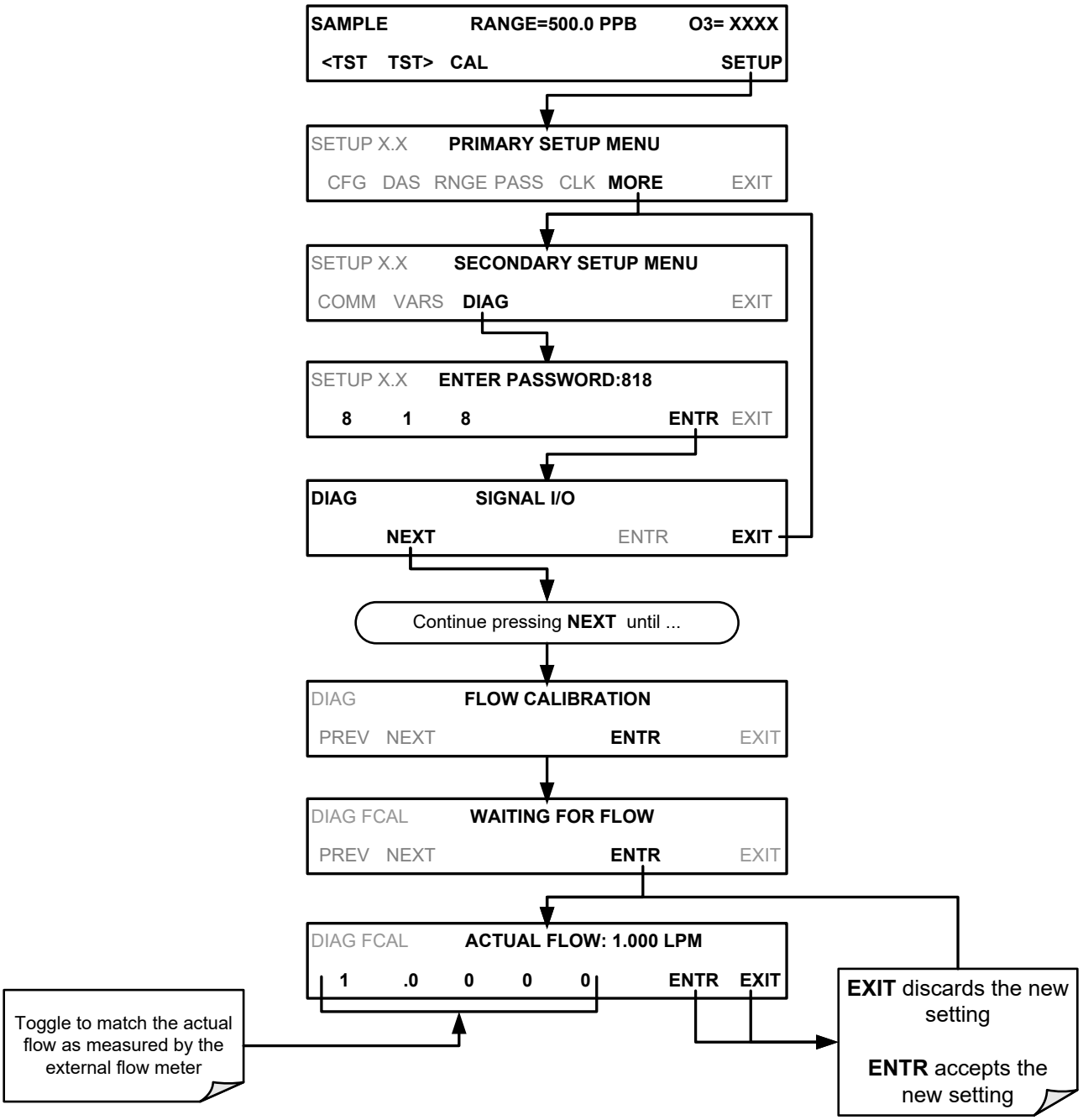

9.6. CALIBRATING THE IZS OPTION O_3 GENERATOR

The following procedure calibrates the output of the O_3 generator that is included in the IZS calibration valve option (OPT-50G). This function:

- Drives the IZS O_3 Generator to output a series of O_3 levels between zero and full scale;
- Measures the actual O_3 output at each level, and;
- Records the generator lamp drive voltage and generator's O_3 output level in a lookup table.

Whenever a certain O_3 output level is requested, the instrument's CPU uses the data in this table to interpolate the correct drive voltage for the desired O_3 output.

Note

Because the instrument waits 5–7 minutes at each step for the O_3 level to stabilize, this calibration operation often takes more than one hour to complete.

To calibrate the O_3 Generator press:

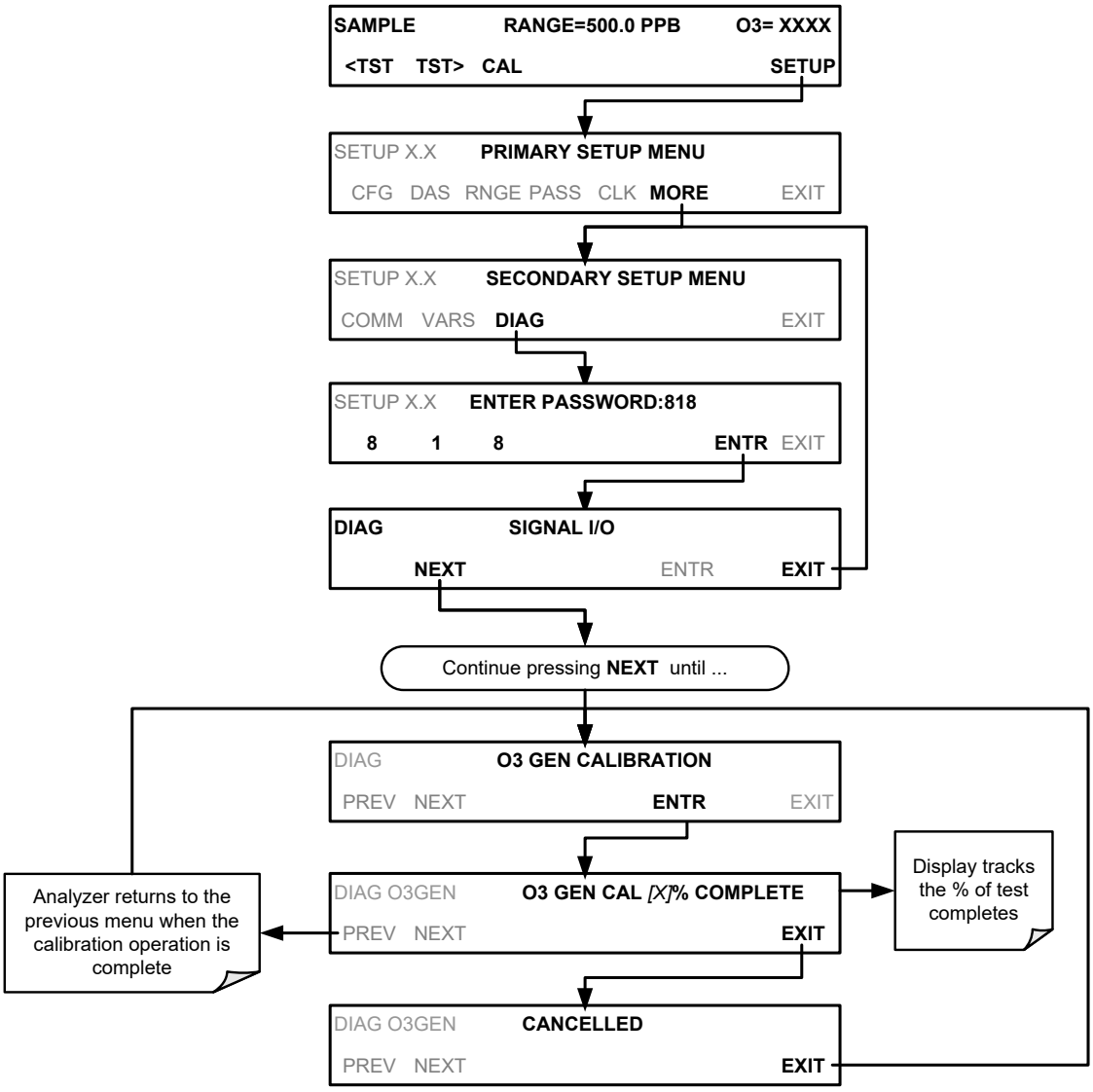

9.7. EPA PROTOCOL CALIBRATION

When running this instrument for U.S. EPA compliance, always calibrate prior to use, adhering to the EPA designation requirements for this instrument. (The official List of Designated Reference and Equivalent Methods is published in the U.S. Federal Register: http://www3.epa.gov/ttn/amtic/criteria.html). Pay strict attention to the built-in warning features, periodic inspection, regular zero/span checks, regular test parameter evaluation for predictive diagnostics and data analysis, and routine maintenance. Any instrument(s) supplying the zero air and span calibration gasses used must themselves be calibrated and that calibration must be traceable to an EPA/NIST primary standard.

Comply with Code of Federal Regulations, Title 40 (downloadable from the U.S. Government Publishing Office at http://www.gpo.gov/fdsys/) and with Quality Assurance Guidance documents (available on the EPA website, http://www3.epa.gov/ttn/amtic/qalist.html). Give special attention to specific regulations regarding the use and operation of photometric ozone analyzers.

10. INSTRUMENT MAINTENANCE

For the most part, the T400 analyzer is maintenance free; there are, however, a minimal number of simple procedures that, when performed regularly, will ensure that the T400 photometer continues to operate accurately and reliably over its lifetime.

Service and troubleshooting are covered in Section11 of this manual.

10.1. MAINTENANCE SCHEDULE

Table 10-1 shows a typical maintenance schedule for the T400. Please note that in certain environments (i.e. dusty, very high ambient pollutant levels) some maintenance procedures may need to be performed more often than shown.

Note

A span and zero calibration check (see CAL CHECK REQ'D Column of Table 10-1) must be performed following some of the maintenance procedures listed below.

- **To perform a CHECK of the instrument's Zero or Span Calibration follow the same steps as described in Section 9.3.**
- **DO NOT PRESS THE ENTR BUTTON at the end of each operation. Pressing the ENTR button resets the stored values for OFFSET and SLOPE and alters the instruments Calibration.**
- **Alternatively, use the Auto cal feature described in Section 9.4 with the with the CALIBRATE ATTRIBUTE SET TO OFF**

WARNING - Electrical Shock Hazard

Risk of electrical shock. Disconnect power before performing any of the following operations that require entry into the interior of the analyzer.

CAUTION
Qualified Personnel

The operations outlined in this Section are to be performed by qualified maintenance personnel only.

Table 10-1: T400 Maintenance Schedule

ITEM	ACTION	FREQ	CAL CHECK REQ'D.[1]	MANUAL SECTION	DATE PERFORMED									
Particulate Filter	Replace	Weekly or as needed	Yes	**10.3.1**										
Verify Test Functions	Record and analyze	Weekly or after any Maintenance or Repair	No	**11.1.2**										
Pump Diaphragm	Replace	As Needed	Yes	**- -**										
O_3 Reference Scrubber	Replace	Every 2-5 years, as needed	Yes	**11.10.2**										
IZS Zero Air Scrubber	Replace	Annually	No	**11.10.3**										
Desiccant (Option 56)	Replace	Regularly as needed	No	**10.3.4**										
Absorption Tube	Inspect - - - Clean	Annually - - - As Needed	Yes	**10.3.7**										
Flow Check	Perform Flow Check	Every 6 Months	No	**10.3.6**										
Leak Check	Perform Leak Check	Annually or after any Maintenance or Repair	Yes	**10.3.5**										
Pneumatic lines	Examine and clean	As needed	Yes if cleaned	**- -**										

10.2. PREDICTIVE DIAGNOSTICS

Predictive diagnostic functions including failure warnings and alarms built into the analyzer's firmware allow the user to determine when repairs are necessary without performing painstaking preventative maintenance procedures.

The Test Functions can also be used to predict failures by looking at how their values change over time. Initially it may be useful to compare the state of these Test Functions to the values recorded on the printed record of the final calibration performed on your instrument at the factory, P/N 04314. The following table can be used as a basis for taking action as these values change with time. The internal data acquisition system (DAS) is a convenient way to record and track these changes. Use APICOM to download and review this data from a remote location (see Section 8.5).

Table 10-2: Predictive Uses for Test Functions

FUNCTION	MODE	BEHAVIOR	INTERPRETATION
STABIL	**ZERO CAL**	Increasing	• Pneumatic leaks – instrument & sample system • Malfunctioning UV lamp (Bench)
O3 REF	**SAMPLE**	Decreasing	• UV lamp ageing • Mercury contamination
O3 DRIVE	**CALS**	Increasing	• Ageing IZS UV lamp (only if reference detector option is installed)
PRES	**SAMPLE**	Increasing > 1"	• Pneumatic Leak between sample inlet and optical bench
		Decreasing > 1"	• Dirty particulate filter • Pneumatic obstruction between sample inlet and optical bench • Obstruction in sampling manifold
SAMP FL	**SAMPLE**	Decreasing	• Pump diaphragm deteriorating • Sample flow orifice plugged/obstructed • Pneumatic obstruction between sample inlet and optical bench • Obstruction in sampling manifold
SLOPE	**SPAN CAL**	Increasing	• Pneumatics becoming contaminated/dirty • Dirty particulate filter • Pneumatic leaks – instrument & sample system
		Decreasing	• Contaminated calibration gas
OFFSET	**ZERO CAL**	Increasing	• Obstructed/leaking Meas/Ref Valve • Pneumatic leaks – instrument & sample system
		Decreasing	• Contaminated zero calibration gas • Obstructed Meas/Ref Valve • Pneumatic leaks – instrument & sample system

10.3. MAINTENANCE PROCEDURES

The following procedures are to be performed periodically as part of the standard maintenance of the Model T400.

10.3.1. REPLACING THE SAMPLE PARTICULATE FILTER

The particulate filter should be inspected often for signs of plugging or contamination. We recommend that when you change the filter; handle it and the wetted surfaces of the filter housing as little as possible. Do not touch any part of the housing, filter element, PTFE retaining ring, glass cover and the o-ring with your bare hands. TAPI recommends using PTFE coated tweezers or similar handling to avoid contamination of the sample filter assembly.

To change the filter:

1. Turn OFF the analyzer to prevent drawing debris into the instrument.
2. Open the T400's hinged front panel and unscrew the knurled retaining ring on the filter assembly.

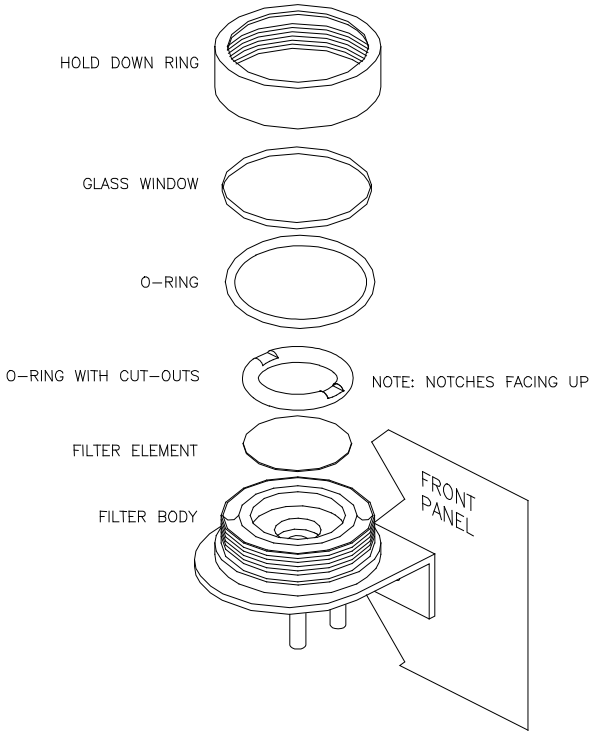

Figure 10-1 Replacing the Particulate Filter

3. Carefully remove the retaining ring, PTFE o-ring, glass filter cover and filter element.
4. Replace the filter, being careful that the element is fully seated and centered in the bottom of the holder.
5. Re-install the PTFE o-ring with the notches up; the glass cover, then screw on the retaining ring and hand tighten. Inspect the seal between the edge of filter and the o-ring to assure a proper seal.
6. Re-start the analyzer.

10.3.2. REBUILDING THE SAMPLE PUMP

The diaphragm in the sample pump periodically wears out and must be replaced. A sample rebuild kit is available – call Tech Support for the part number of the pump rebuild kit. Instructions and diagrams are included with the kit.

Always perform a flow and leak check after rebuilding the sample pump.

10.3.3. REPLACING THE IZS OPTION ZERO AIR SCRUBBER

1. Turn off the analyzer.
2. Remove the cover from the analyzer.
3. Disconnect the white nylon ¼”-1/8” fitting from the Zero Air Scrubber (See Figure 10-2).
4. Remove the old scrubber by disconnecting the 9/16” fitting at the top of the O_3 generator tower, then removing the scrubber.
5. Install the new scrubber by reversing these instructions.

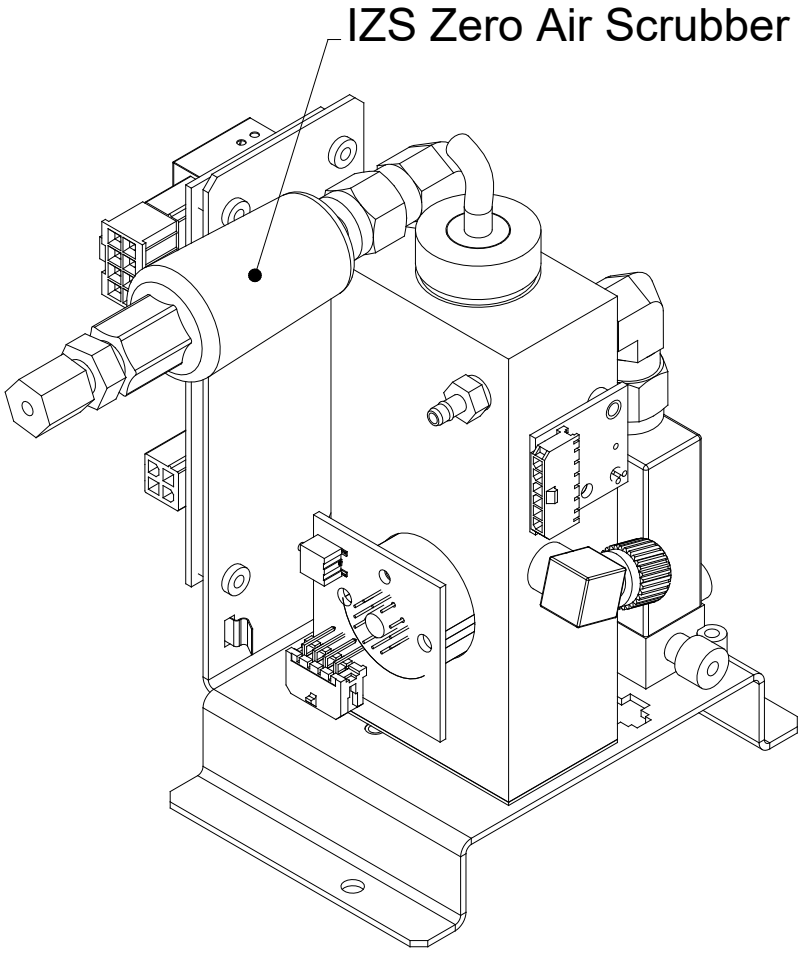

Figure 10-2 Replacing the IZS Zero Air Scrubber

10.3.4. IZS DESICCANT (OPTION 56)

The analyzer can be fitted with a desiccant dryer to provide a dry air source to the IZS sub-system. This option (Table 1-1) consists of a rear panel mounted scrubber cartridge filled with anhydrous calcium sulfate ($CaSO_4$) desiccant.

The desiccant material is expendable and must be replaced at regular intervals (Table 10-1).

- The material exhibits a color change when it has been saturated with water vapor, turning from blue to pink.
- The scrubber cartridge should be refilled before the entire scrubber turns pink.
- Replacement interval will depend on how often the IZS is used, as well as ambient levels of humidity in your application.
- Initially the desiccant should be monitored frequently until a standard replacement interval can be established.

10.3.5. PERFORMING LEAK CHECKS

Leaks are the most common cause of analyzer malfunction; Section 10.3.5.1 presents a simple leak check procedure. Section 10.3.5.2 details a more thorough procedure.

10.3.5.1. Vacuum Leak Check and Pump Check

This method is easy and fast. It detects, but does not locate most leaks; it also verifies that the sample pump is in good condition.

1. Turn the analyzer ON, and allow enough time for flows to stabilize.
2. Cap the sample inlet port.
3. After 2 minutes, when the pressures have stabilized, note the SAMP FL and PRES test function readings on the front panel.
   - If SAMP FL < 10 CC/M then the analyzer is free of any large leaks.
   - If PRES < 10 IN-HG-A then the sample pump diaphragm is in good condition.

10.3.5.2. Pressure Leak Check

If you cannot locate the leak by the above procedure, obtain a leak checker that contains a small pump, shut-off valve and pressure gauge. Alternatively, a tank of pressurized gas, with the two-stage regulator adjusted to ≤ 15 psi; a shutoff valve and pressure gauge may be used.

CAUTION – General Safety Hazard

Once the fittings have been wetted with soap solution, DO NOT apply / re-apply vacuum, as this will cause soap solution to be drawn into the instrument, contaminating it.

DO NOT exceed 15 psi pressure.

1. Turn OFF power to the instrument.
2. Install a leak checker or tank of gas as described above on the sample inlet at the rear panel.
3. Install a cap on the exhaust fitting on the rear panel.

4. Remove the instrument cover and locate the sample pump. Disconnect the two fittings on the sample pump and install a union fitting in place of the pump. The analyzer cannot be leak checked with the pump in line due to internal leakage that normally occurs in the pump.
5. Pressurize the instrument with the leak checker, allowing enough time to pressurize the instrument through the critical flow orifice fully. Check each fitting with soap bubble solution, looking for bubbles. Once the fittings have been wetted with soap solution, do not re-apply vacuum, as it will draw soap solution into the instrument and contaminate it. Do not exceed 15 psi pressure.
6. If the instrument has one of the zero and span valve options, the normally closed ports on each valve should also be separately checked. Connect the leak checker to the normally closed ports and check with soap bubble solution.
7. If the analyzer is equipped with an IZS option, connect the leak checker to the dry air inlet and check with soap bubble solution.
8. Once the leak has been located and repaired, the leak-down rate should be < 1 in-Hg (0.4 psi) in 5 minutes after the pressure is shut off.

10.3.6. PERFORMING A SAMPLE FLOW CHECK

Note

Always use a separate calibrated flow meter capable of measuring flows in the 0 – 1000 cc/min range to measure the gas flow rate though the analyzer. DO NOT use the built in flow measurement viewable from the Front Panel of the instrument. This measurement is only for detecting major flow interruptions such as clogged or plugged gas lines. See rear panel for sample port location.

1. Turn off power.
2. Attach the flow meter to the sample inlet port on the rear panel. Ensure that the inlet to the flow meter is at atmospheric pressure.
3. Turn on instrument power.
4. Sample flow should be 800 cc/min ± 10%.

Low flows indicate blockage somewhere in the pneumatic pathway. High flows indicate leaks downstream of the Flow Control Assembly.

Once an accurate measurement has been recorded by the method described above, adjust the analyzer's internal flow sensors by following the procedure described in Section 9.5.2.

10.3.7. MAINTENANCE OF THE PHOTOMETER ABSORPTION TUBE

10.3.7.1. Cleaning or Replacing the Absorption Tube

Note

Although this procedure should never be needed as long as the user is careful to supply the photometer with clean, dry and particulate-free zero air only, it is included here for those rare occasions when cleaning or replacing the absorption tube may be required.

1. Power off the unit.
2. Remove the cover from analyzer.
3. Locate the optical bench (see Figure 3-5).
4. Remove the top cover of the optical bench.
5. Unclip the sample thermistor from the tube.
6. Loosen the two screws on the round tube retainers at either end of the tube.
7. Using both hands, carefully rotate the tube to free it.
8. Slide the tube towards the lamp housing.
    - Slide the front of the tube past the detector block and out of the instrument.

CAUTION
General Safety Hazard

Do not cause the tube to bind against the metal housings.

The tube may break and cause serious injury.

9. Clean the tube only with de-ionized water.
10. Air dry the tube.
11. Check the cleaning job by looking down the bore of the tube.
    - It should be free from dirt and lint.
12. Inspect the o-rings that seal the ends of the optical tube (these o-rings may stay seated in the manifolds when the tube is removed.)
    - If there is any noticeable damage to these o-rings, they should be replaced.
13. Re-assemble the tube into the lamp housing and return the top cover of the optical bench.
14. Return the cover to the analyzer and power up the analyzer.
15. Perform an **AUTO LEAK CHECK** on the instrument.

Note

Before re-tightening the retainer screws, gently push the tube all the way towards the front of the optical bench when it is re-assembled. This will ensure that the tube is assembled with the forward end against the stop inside the detector manifold.

10.3.8. OPTICAL BENCH UV LAMP ADJUSTMENT

This procedure details the steps for adjustment of the UV source lamp in the optical bench assembly. This procedure should be done whenever the test function **O3 REF** value drops below 3000 mV.

CAUTION – UV Radiation Risk
Do not look directly at the light of the UV lamp.

1. Make sure the analyzer is warmed-up and has been running for at least 15 minutes before proceeding.
2. Remove the cover from the analyzer.
3. Locate the **UV DETECTOR GAIN ADJUST POT** on the photometer assembly, shown in
4. Figure 10-3, in the section that follows.

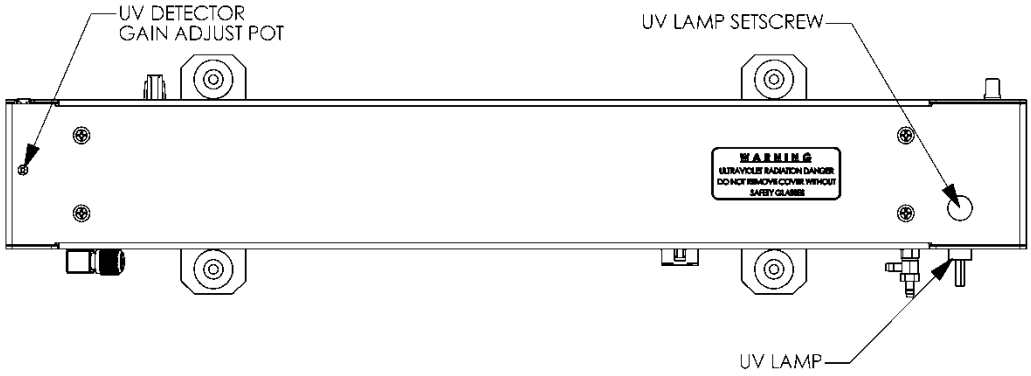

Figure 10-3: Optical Bench – Lamp Adjustment/ Installation

5. Perform the following procedure:

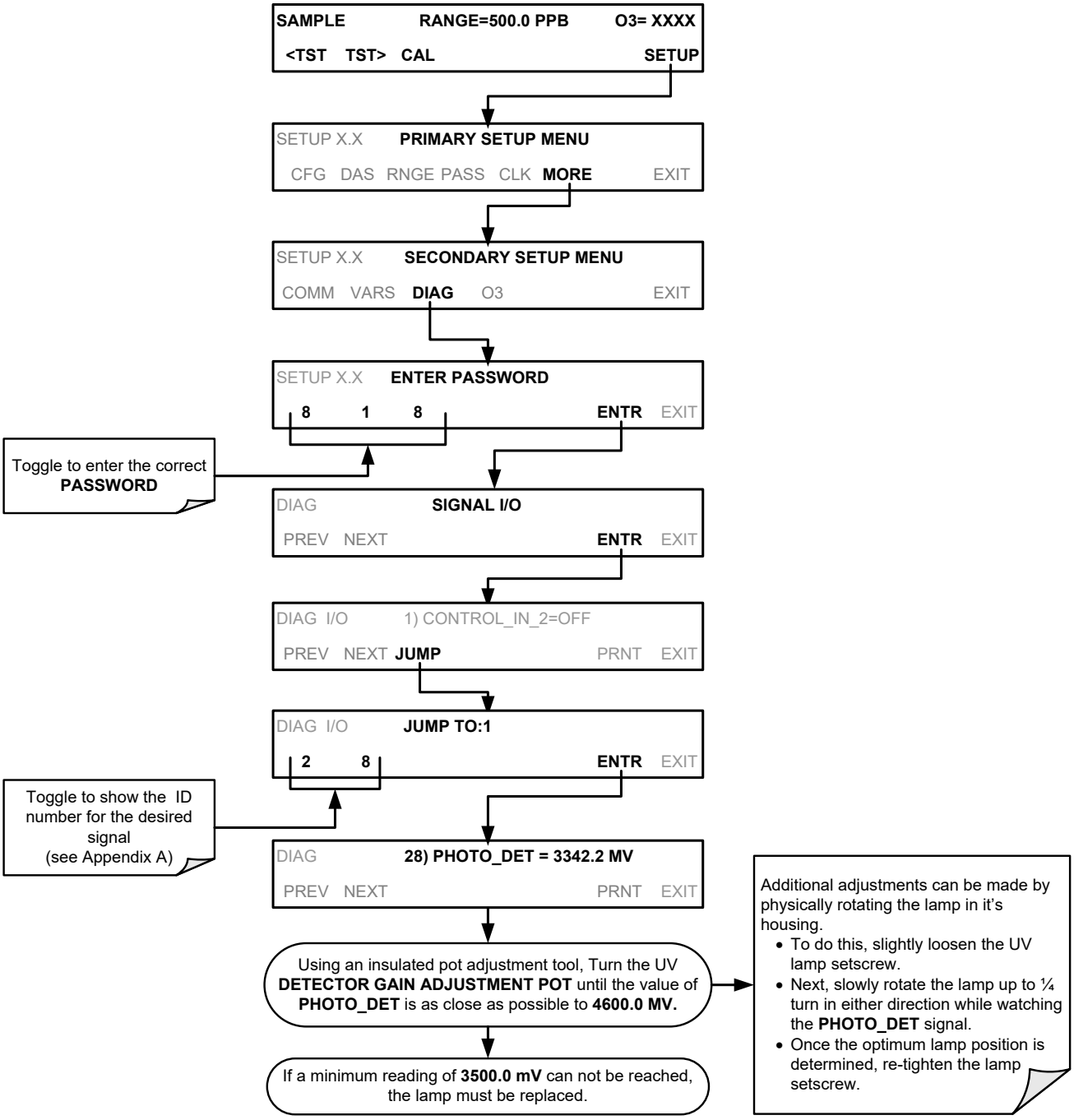

6. Replace the cover on the analyzer.

10.3.9. OPTICAL BENCH UV LAMP REPLACEMENT

This procedure details the steps for replacement of the UV source lamp (see

Figure 10-3 in Section 10.3.8) in the optical bench assembly. This procedure should be done whenever the lamp can no longer be adjusted as described in Section 10.3.8.

CAUTION – UV Radiation Risk
Power down the instrument before proceeding with UV lamp replacement.

1. Turn the analyzer off.
2. Remove the cover from the analyzer.
3. Locate the Optical Bench Assembly (see Figure 3-5).
4. Locate the UV lamp at the front of the optical bench assembly (see Figure 12-17)
5. Unplug the lamp cable from the power supply connector on the side of the optical bench.
6. Slightly loosen (do not remove) the UV lamp setscrew and pull the lamp from its housing.
7. Install a new lamp in the housing, pushing it all the way in.
   - Leave the UV lamp setscrew loose for now.
8. Turn the analyzer back on and allow it to warm up for at least 15 minutes.

Turn the UV detector gain adjustment pot (see

9. Figure 10-3) clockwise to its minimum value. The pot should click softly when the limit is reached.
10. Perform the UV Lamp Adjustment procedure described in Section 10.3.8 with the following exceptions:
    - Slowly rotate the lamp in its housing (up to ¼ turn in either direction) until a **MINIMUM** value is observed.
    - Make sure the lamp is pushed all the way into the housing while performing this rotation.
    - If the **PHOTO_DET** will not drop below 5000 mV while performing this rotation, contact TAPI Technical Support for assistance.
    - Once a lamp position is found that corresponds to a minimum observed value for **PHOTO_DET**, tighten the lamp setscrew at the approximate minimum value observed.
    - Adjust **PHOTO_DET** within the range of 4400 – 4600 mV.
11. Replace the cover on the analyzer.

GENERAL WARNING/CAUTION

The UV lamp contains mercury (Hg), which is considered hazardous waste. The lamp should be disposed of in accordance with local regulations regarding waste containing mercury.

10.3.10. ADJUSTMENT OR REPLACEMENT OF OPTIONAL IZS OZONE GENERATOR UV LAMP

This procedure details the steps for replacing and calibrating the UV lamp of the O_3 generator included in the IZS option (OPT-50G). To adjust an existing lamp, remove the analyzer's cover and skip to Step 8.

1. Turn off the analyzer.
2. Remove the cover from the analyzer.
3. Locate the O_3 generator (see Figure 3-5).

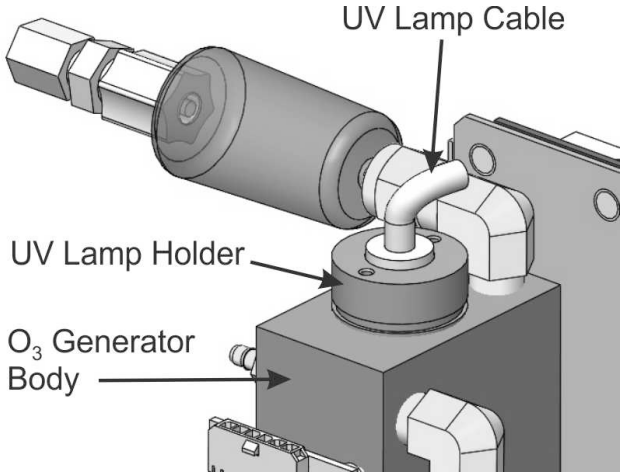

Figure 10-4: O_3 Generator UV Lamp

4. Unscrew the UV lamp holder and gently pull out the old lamp.
5. Inspect the o-ring beneath the lamp holder and replace if damaged.
6. Install the new lamp in O_3 generator housing, and partially tighten the UV lamp holder.
   - The lamp should be free enough to be rotated in the assembly by grasping the lamp cable.
7. Turn on analyzer and allow it to stabilize for at least 20 minutes.

8. Locate the potentiometer used to adjust the O_3 generator UV output.

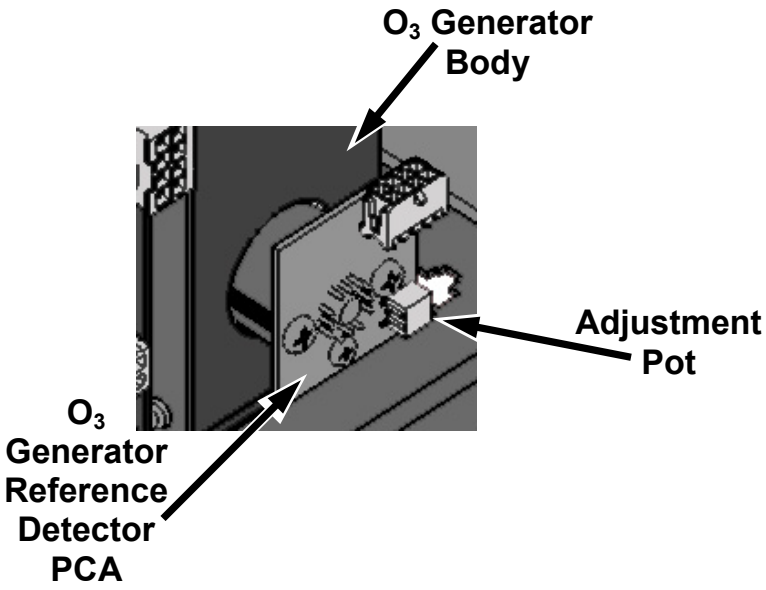

Figure 10-5: Location of O_3 Generator Adjustment Pot

9. Perform the following procedure:

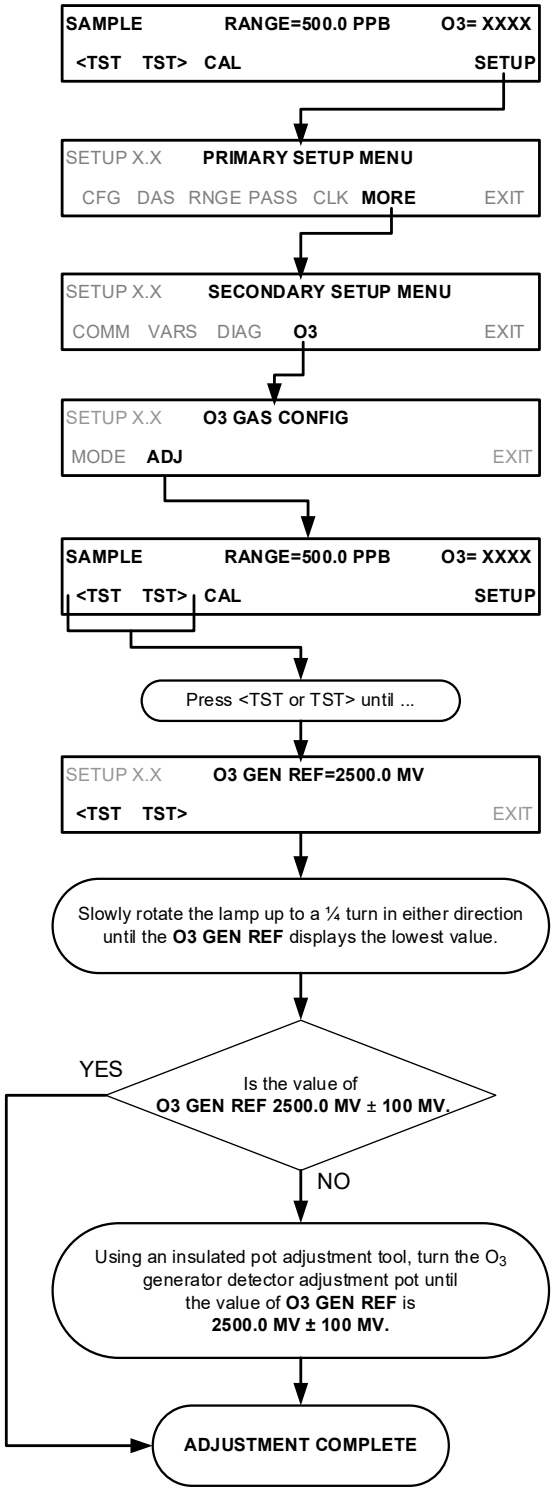

10. Finish tightening the UV lamp holder so that it is snug but not excessively tight.
11. Replace the analyzer's cover.
12. Perform a leak check (See Section 10.3.5).
13. Perform an Ozone generator calibration (see Section 9.6)

11. TROUBLESHOOTING & SERVICE

This section contains a variety of methods for identifying the source of performance problems with the analyzer. Also included in this section are service procedures

QUALIFIED TECHNICIAN

The operations outlined in this Section must be performed by qualified maintenance personnel only.

CAUTION – RISK OF ELECTRICAL SHOCK!

- **Some operations need to be carried out with the instrument open and running.**
- **Exercise caution to avoid electrical shocks and electrostatic or mechanical damage to the analyzer.**
- **Do not drop tools into the analyzer or leave those after your procedures.**
- **Do not shorten or touch electric connections with metallic tools while operating inside the analyzer.**
- **Use common sense when operating inside a running analyzer.**

11.1. GENERAL TROUBLESHOOTING

The T400 Photometric Ozone Analyzer has been designed so that problems can be rapidly detected, evaluated and repaired. During operation, it continuously performs diagnostic tests and provides the ability to evaluate its key operating parameters without disturbing monitoring operations.

A systematic approach to troubleshooting will generally consist of the following five steps:

1. Note any **WARNING MESSAGES** shown in the front panel display, and take corrective action as necessary.
2. Examine the values of all **TEST FUNCTIONS** and compare them to factory values. Note any major deviations from the factory values and take corrective action.
3. Use the internal electronic status LEDs to determine whether the electronic communication channels are operating properly.
   - Verify that the DC power supplies are operating properly by checking the voltage test points on the relay PCA.
   - Note that the analyzer's DC power wiring is color-coded and these colors match the color of the corresponding test points on the relay PCA.
4. **Suspect a leak first!**

- Technical Support data indicate that the majority of all problems are eventually traced to leaks in the internal pneumatics of the analyzer or the diluent gas and source gases delivery systems.
- Check for gas flow problems such as clogged or blocked internal/external gas lines, damaged seals, punctured gas lines, a damaged / malfunctioning pumps, etc.

1. Follow the procedures defined in Section 3.4.3 to confirm that the analyzer's vital functions are working (power supplies, CPU, relay PCA, touchscreen, PMT cooler, etc.).
   - See Figure 3-16 for the general layout of components and sub-assemblies in the analyzer.
   - See the wiring interconnect diagram in Appendix D.

11.1.1. FAULT DIAGNOSIS WITH WARNING MESSAGES

The most common and/or serious instrument failures will result in a warning message being displayed on the front panel. Table 11-1 lists warning messages, along with their meanings and recommended corrective actions.

It should be noted that if more than two or three warning messages occur at the same time, it is often an indication that some fundamental sub-system (power supply, relay PCA, motherboard) has failed, rather than an indication of the specific failures referenced by the warnings. In this case, a combined-error analysis needs to be performed.

The T400 will alert the user that a Warning Message is active by flashing the FAULT LED and displaying the Warning message in the Param field along with the CLR button (press to clear Warning message). The MSG button displays if there is more than one warning in queue or if you are in the TEST menu and have not yet cleared the message. The following display/touchscreen examples provide an illustration of each:

The analyzer will also alert the user via the Serial I/O COM port(s) and cause the FAULT LED on the front panel to blink.

To view or clear the various warning messages press:

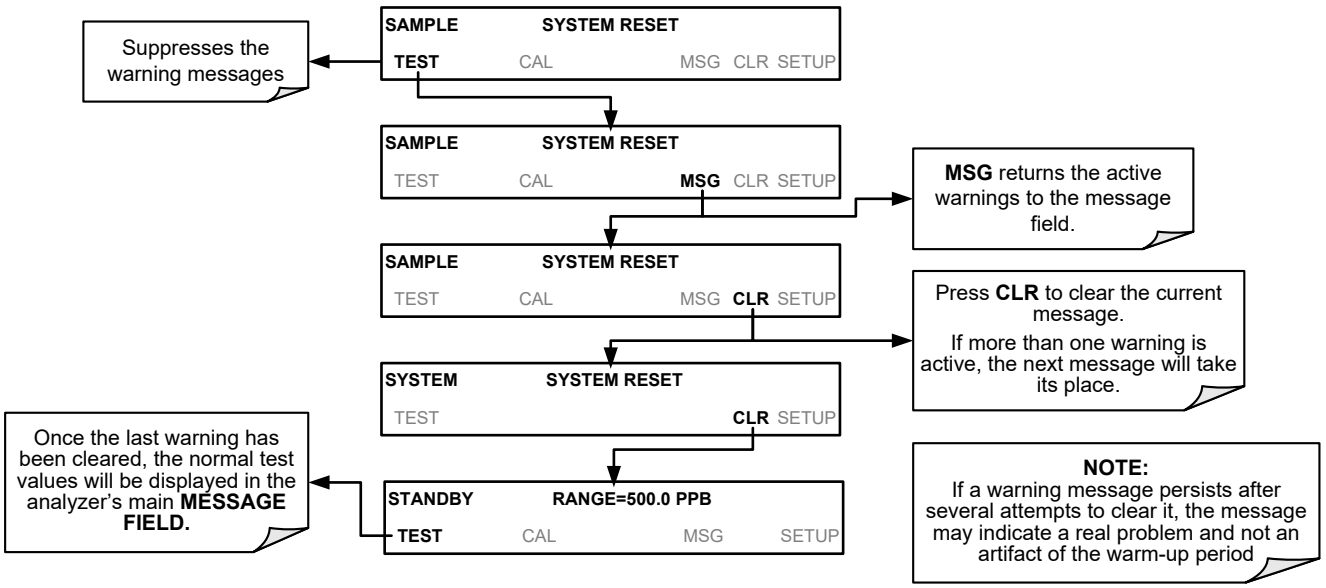

Table 11-1: Warning Messages in Display Param Field

WARNING	FAULT CONDITION	POSSIBLE CAUSES
PHOTO TEMP WARNING	The optical bench temperature lamp temp is ≥ 51°C.	• Bench lamp heater • Bench lamp temperature sensor • Relay controlling the bench heater • Entire Relay Board • I^2C Bus • "Hot" Lamp
BOX TEMP WARNING	Box Temp is < 5°C or > 48°C.	• Box Temperature typically runs ~7°C warmer than ambient temperature. • Poor/blocked ventilation to the analyzer • Stopped Exhaust-Fan • Ambient Temperature outside of specified range
CANNOT DYN SPAN	Dynamic Span operation failed.	• Measured concentration value is too high or low • Concentration Slope value to high or too low
CANNOT DYN ZERO	Dynamic Zero operation failed.	• Measured concentration value is too high • Concentration Offset value to high
CONFIG INITIALIZED	Configuration and Calibration data reset to original Factory state.	• Failed Disk on Module • User erased data
DATA INITIALIZED	Data Storage in DAS was erased.	• Failed Disk on Module • User cleared data.
LAMP STABIL WARN	Reference value is unstable.	• Faulty UV source lamp • Noisy UV detector • Faulty UV lamp power supply
REAR BOARD NOT DET	Motherboard not detected on power up.	This warning only appears on Serial I/O COM Port(s) Front Panel Display will be frozen, blank or will not respond. • Failure of Motherboard
RELAY BOARD WARN	The CPU cannot communicate with the Relay Board.	• I^2C Bus failure • Failed Relay Board • Loose connectors/wiring
SAMPLE FLOW WARN	Sample flow rate is < 500 cc/min or > 1000 cc/min.	• Failed Sample Pump • Blocked Sample Inlet/Gas Line • Dirty Particulate Filter • Leak downstream of Critical Flow Orifice • Failed Flow Sensor
SAMPLE PRES WARN	Sample Pressure is <15 in-Hg or > 35 in-Hg Normally 29.92 in-Hg at sea level decreasing at 1 in-Hg per 1000 ft of altitude (with no flow – pump disconnected).	If Sample Pressure is < 15 in-HG: • Blocked Particulate Filter • Blocked Sample Inlet/Gas Line • Failed Pressure Sensor/circuitry If Sample Pressure is > 35 in-HG: • Bad Pressure Sensor/circuitry
SAMPLE TEMP WARN	Sample temperature is < 10°C or > 50°C.	• Ambient Temperature outside of specified range • Failed Sample Temperature Sensor • Relay controlling the Bench Heater • Failed Relay Board • I^2C Bus
PHOTO REF WARNING	Occurs when Ref is <2500 mVDC or >4950 mVDC.	• UV Lamp • UV Photo-Detector Preamp

WARNING	FAULT CONDITION	POSSIBLE CAUSES
O3 GEN TEMP WARNING	IZS Ozone Generator Temp is outside of control range of 48°C ± 3°C.	•No IZS option installed, instrument improperly configured •O_3 generator heater •O_3 generator temperature sensor •Relay controlling the O_3 generator heater •Entire Relay Board •I^2C Bus
SYSTEM RESET	The computer has rebooted.	•This message occurs at power on. •If it is confirmed that power has not been interrupted: •Failed +5 VDC power •Fatal Error caused software to restart •Loose connector/wiring

Note **A failure of the analyzer's CPU or Motherboard can result in any or ALL of the preceding messages.**

11.1.2. FAULT DIAGNOSIS WITH TEST FUNCTIONS

Besides being useful as predictive diagnostic tools, the test functions viewable from the analyzer's front panel can be used to isolate and identify many operational problems when combined with a thorough understanding of the analyzer's Theory of Operation (see Section 12).

The acceptable ranges for these test functions are listed in the "Nominal Range" column of the analyzer's Final Test and Validation Data Sheet shipped with the instrument. Values outside these acceptable ranges indicate a failure of one or more of the analyzer's subsystems. Functions whose values are still within acceptable ranges but have significantly changed from the measurement recorded on the factory data sheet may also indicate a failure.

A worksheet has been provided in Appendix C to assist in recording the value of these test functions.

Note **A value of "XXXX" displayed for any of these TEST functions indicates an OUT OF RANGE reading.**

Note **Sample Pressure measurements are represented in terms of ABSOLUTE pressure because this is the least ambiguous method reporting gas pressure. Absolute atmospheric pressure is about 29.92 in-Hg-A at sea level. It decreases about 1 in-Hg per 1000 ft gain in altitude. A variety of factors such as air conditioning systems, passing storms, and air temperature, can also cause changes in the absolute atmospheric pressure.**

Table 11-2: Test Functions - Indicated Failures

TEST FUNCTION	DIAGNOSTIC RELEVANCE AND CAUSES OF FAULT CONDITIONS.
TIME	•Time of Day clock is too fast or slow. To adjust see Section 5.6. •Battery in clock chip on CPU board may be dead.
RANGE	Incorrectly configured Measurement Range(s) could cause response problems with a Data logger or Chart Recorder attached to one of the Analog Outputs. •If the Range selected is too small, the recording device will show over range. •If the Range is too big, the device will show minimal or no apparent change in readings.
STABIL	Indicates noise level of instrument or stability of the O_3 concentration of Sample Gas.
O3 MEAS & O3 REF	If the value displayed is too high the UV Source has become brighter. Adjust the variable gain potentiometer on the UV Preamp Board in the optical bench. If the value displayed is too low: •< 100mV – Bad UV lamp or UV lamp power supply. •< 2000mV – Lamp output has dropped, adjust UV Preamp Board or replace lamp. If the value displayed is constantly changing: •Bad UV lamp. •Defective UV lamp power supply. •Failed I^2C Bus. If the O_3 Ref value changes by more than 10mV between zero and span gas: •Defective/leaking switching valve.
PRES	See Table 11-1 for **SAMPLE PRES WARN.**
SAMPLE FL	Check for Gas Flow problems. See Section 11.4
SAMPLE TEMP	Temperatures outside of the specified range or oscillating temperatures are cause for concern.
PHOTO LAMP	Bench temp control improves instrument noise, stability and drift. Temperatures outside of the specified range or oscillating temperatures are cause for concern. See Table 11-1 for **PHOTO TEMP WARNING**.
BOX TEMP	If the Box Temperature is out of range, check fan in the Power Supply Module. Areas to the side and rear of instrument should allow adequate ventilation. See Table 11-1 for **BOX TEMP WARNING**.
O3 GEN TEMP	If the O_3 Generator Temperature is out of range, check the O_3 Generator heater and temperature sensor. See Table 11-1 for **O3 GEN TEMP WARNING**.
SLOPE	Values outside range indicate: •Contamination of the Zero Air or Span Gas supply. •Instrument is miscalibrated. •Blocked Gas Flow. •Faulty Sample Pressure Sensor (P1) or circuitry. •Bad/incorrect Span Gas concentration.
OFFSET	Values outside range indicate: •Contamination of the Zero Air supply.

11.1.3. DIAG → SIGNAL I/O: USING THE DIAGNOSTIC SIGNAL I/O FUNCTION

The signal I/O diagnostic mode allows access to the digital and analog I/O in the analyzer. Some of the digital signals can be controlled through the touchscreen. These signals, combined with a thorough understanding of the instrument's Theory of Operation (Section 12), are useful for troubleshooting in three ways:

- The technician can view the raw, unprocessed signal level of the analyzer's critical inputs and outputs.
- Many of the components and functions that are normally under algorithmic control of the CPU can be manually controlled.
- The technician can directly control the signal level Analog and Digital Output signals.

This allows the technician to observe systematically the effect of directly controlling these signals on the operation of the analyzer. Figure 11-1 is an example of how to use the Signal I/O menu to view the raw voltage of an input signal or to control the state of an output voltage or control signal.

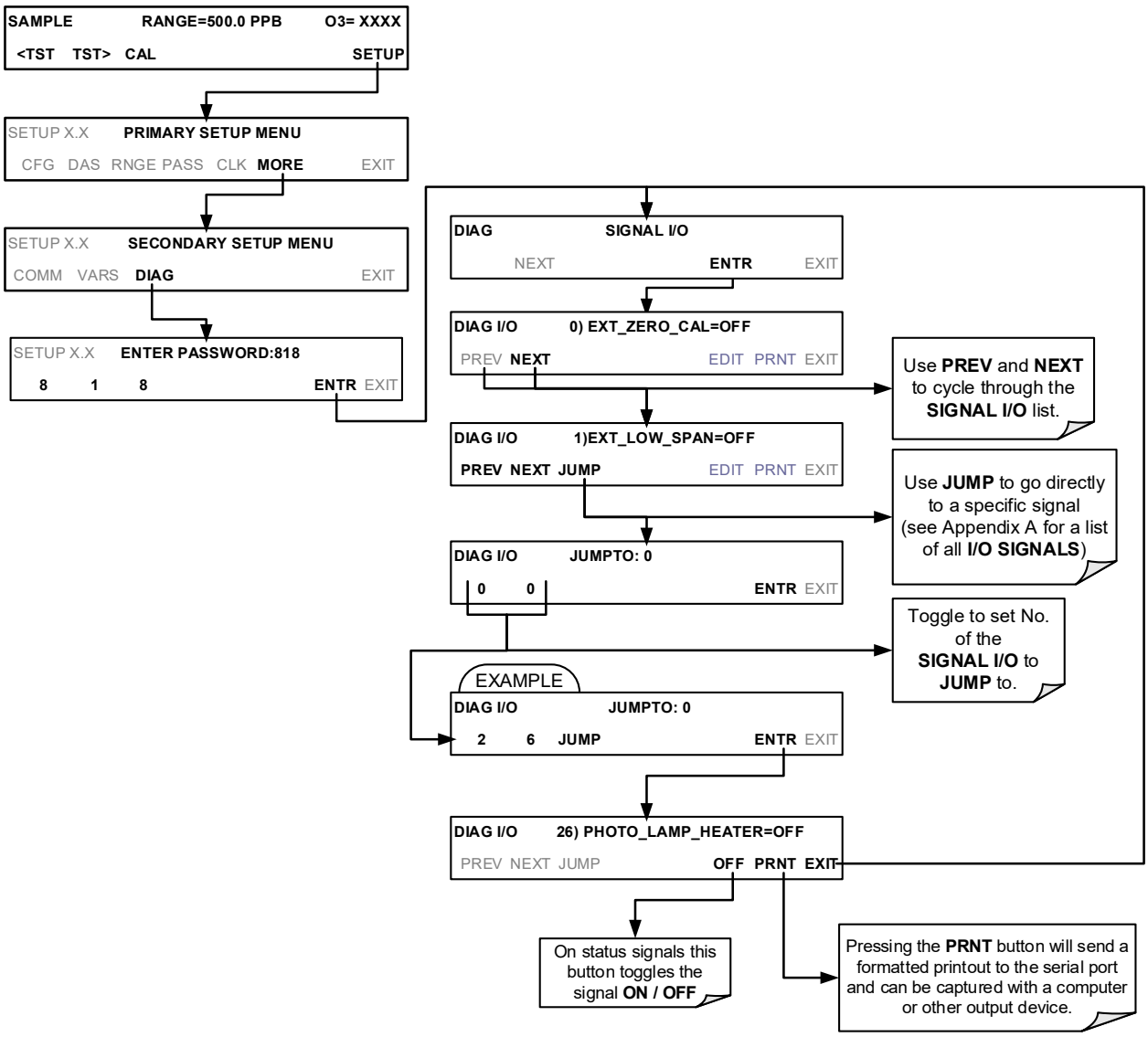

Figure 11-1: Example of Signal I/O Function

Note

Any I/O signals changed while in the signal I/O menu will remain in effect *ONLY* until signal I/O menu is exited. The analyzer regains control of these signals upon exit. See Appendix A-4 for a complete list of the parameters available for review under this menu.

11.2. USING THE ANALOG OUTPUT TEST CHANNEL

The signals available for output over the T400's analog output channel can also be used as diagnostic tools. See Section 5.10 for instruction on activating the analog output and selecting a function.

Table 11-3: Test Channel Outputs as Diagnostic Tools

TEST CHANNEL	DESCRIPTION	ZERO	FULL SCALE	CAUSES OF EXTREMELY HIGH / LOW READINGS
PHOTO MEAS	Raw output of the photometer during its measure cycle	0 mV	5000 mV	If the value displayed is: - >5000 mV: The UV source has become brighter; adjust the UV Detector Gain potentiometer. - < 100mV – Bad UV lamp or UV lamp power supply. - < 2000mV – Lamp output has dropped, adjust UV Preamp Board or replace lamp. If the value displayed is constantly changing: - Bad UV lamp. - Defective UV lamp power supply. - Failed I^2C Bus. If the PHOTO REFERENCE value changes by more than 10mV between zero and span gas: - Defective/leaking M/R switching valve.
PHOTO REF	Raw output of the photometer during its reference cycle	0 mV	5000 mV	
O_3 GEN REF	Raw output of the O_3 generator's reference detector	0 mV	5000 mV	Possible failure of: - O_3 generator UV Lamp - O_3 generator reference detector - O_3 generator lamp power supply - I^2C bus
SAMPLE PRESSURE	Pressure of gas in the photometer absorption tube	0 In-Hg-A	40 In-Hg-A	Check for Gas Flow problems.
SAMPLE FLOW	Gas flow rate through the photometer	0 cm^3/min	1000 cc/m	Check for Gas Flow problems.
SAMPLE TEMP	Temperature of gas in the photometer absorption tube	0 °C	70 °C	Possible causes of faults are the same as **SAMPLE TEMP** from Table 11-2
PHOTO LAMP TEMP	Temperature of the photometer UV lamp	0 °C	70 °C	Possible failure of: - Bench lamp heater - Bench lamp temperature sensor - Relay controlling the bench heater - Entire Relay PCA - I^2C Bus - Hot" Lamp
O_3 SCRUB TEMP	Temperature of the optional metal wool scrubber.	0 °C	70 °C	Possible failure of: - Scrubber heater or temperature sensor - Bad or loose wiring in the TC input connector on relay PCA - Incorrectly configured TC input (e.g. J-type instead of K-type) - AC Relay controlling the scrubber heater - Entire Relay PCA - I^2C Bus
O_3 **LAMP TEMP**	Temperature of the IZS Option's O_3 generator UV lamp	0 mV	5000 mV	Same as **PHOTO TEMP WARNING from** Table 11-1
CHASSIS TEMP	Temperature inside the T400's chassis (same as **BOX TEMP**)	0 °C	70 °C	Possible causes of faults are the same as **BOX TEMP WARNING** from Table 11-1

11.3. USING THE INTERNAL ELECTRONIC STATUS LEDS

Several LEDs are located inside the instrument to assist in determining if the analyzer's CPU, I^2C bus and Relay PCA are functioning properly.

11.3.1. CPU STATUS INDICATOR

DS5, a red LED that is located on upper portion of the motherboard, just to the right of the CPU board, flashes when the CPU is running the main program loop. After power-up, approximately 30 – 60 seconds, DS5 should flash on and off. If the front panel display is working but DS5 does not flash, then the program files have become corrupted; contact Technical Support because it may be possible to recover operation of the analyzer. If after 30 – 60 seconds, neither DS5 is flashing noris the front panel display working, then the CPU is bad and must be replaced.

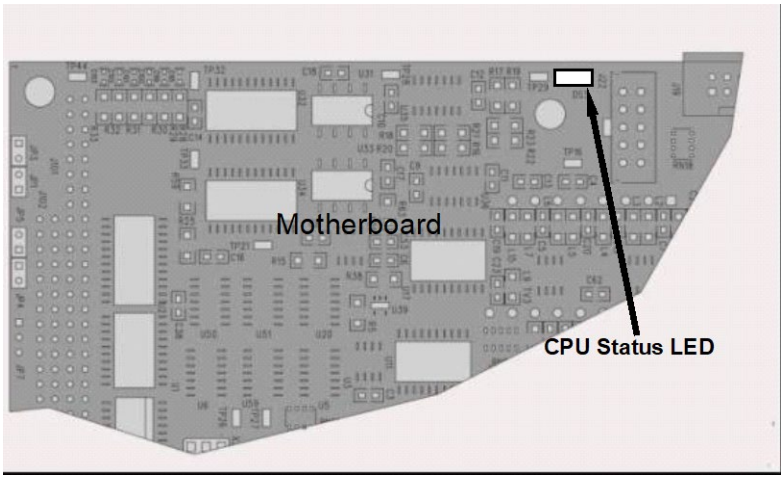

Figure 11-2: CPU Status Indicator

11.3.2. RELAY PCA STATUS LEDS

There are sixteen LEDs located on the Relay PCA. Some are not used on this model.

11.3.2.1. I^2C Bus Watchdog Status LEDs

The most important is D1 (Figure 11-3), which indicates the health of the I^2C bus (see Table 11-4).

Table 11-4: Relay PCA Watchdog LED Failure Indications

LED	Function	Fault Status	Indicated Failure(s)
D1 (Red)	I^2C bus Health (Watchdog Circuit)	Continuously ON or Continuously OFF	Failed/Halted CPU Faulty Motherboard, Valve Driver board or Relay PCA Faulty connectors/wiring between Motherboard, Valve Driver board or Relay PCA Failed/Faulty +5 VDC Power Supply (PS1)

If D1 is blinking, then the other LEDs (Figure 11-3 and Table 11-5) can be used in conjunction with **DIAG** Menu Signal I/O to identify hardware failures of the relays and switches on the Relay PCA.

11.3.2.2. O_3 Option Status LED s

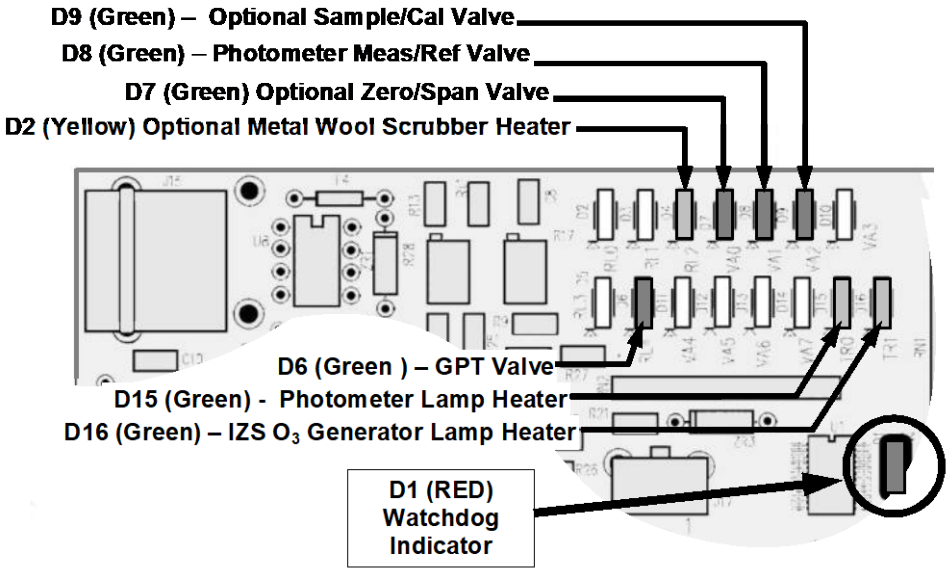

Figure 11-3: Relay PCA Status LEDS Used for Troubleshooting

Table 11-5: Relay PCA Status LED Failure Indications

LED	FUNCTION	SIGNAL I/O PARAMETER		DIAGNOSTIC TECHNIQUE
		ACTIVATED BY	VIEW RESULT	
D2[1] Yellow	Metal Wool Scrubber Heater[1]	**O3_SCRUB_HEATER**	**O3 SCRUB**	Voltage displayed should change. If not: • Failed Heater • Faulty Temperature Sensor • Failed AC Relay • Faulty connectors/wiring
D7 Green	Zero/Span Gas Valve[2]	**SPAN_VALVE**	N/A	Valve should audibly change states. If not: • Failed Valve • Failed Relay Drive IC on Relay PCA • Failed Relay PCA • Faulty +12 VDC Supply (PS2) • Faulty connectors/wiring
D8 Green	Measure/Ref Valve	**PHOTO_REF_VALVE**	N/A	
D9 Green	Sample/Cal Gas Valve[3]	**CAL_VALVE**	N/A	
D15 Green	Photometer UV Lamp Heater	**PHOTO_LAMP_HEATER**	**PHOTO_LAMP**	Voltage displayed should change. If not: • Failed Heater • Faulty Temperature Sensor • Failed AC Relay • Faulty connectors/wiring
D16[2] Green	IZS O_3 Generator UV Lamp Heater	**O3_GEN_HEATER**	**O3 GEN TEMP**	

[1] Only applies on analyzers with metal wool scrubber option installed.
[2] Only applies to instruments with calibration valve options installed.
[3] Only applies on analyzers with IZS options installed.

11.4. GAS FLOW PROBLEMS

In general, flow problems can be divided into three categories:

- Flow is too high
- Flow is greater than zero, but is too low, and/or unstable
- Flow is zero (no flow)

When troubleshooting flow problems, first confirm that the actual flow and not the analyzer's flow detection hardware and software are in error.

Use an independent flow meter to perform a flow check as described in Section 10.3.6.

11.4.1. TYPICAL FLOW PROBLEMS

11.4.1.1. Flow is Zero

The unit displays a **SAMPLE FLOW** warning message on the front panel display or the **SAMPLE FLOW** Test Function reports a zero or very low flow rate.

Confirm that the sample pump is operating (turning). If not, use an AC voltmeter to make sure that power is being supplied to the pump. If AC power is being supplied to the pump, but it is not turning, replace the pump.

If the pump is operating but the unit reports no gas flow, perform a flow check as described in Section 10.3.6.

If no independent flow meter is available:

1. Disconnect the gas lines from both the sample inlet and the exhaust outlet on the rear panel of the instrument.
2. Make sure that the unit is in basic SAMPLE Mode.
3. Place a finger over an exhaust outlet on the rear panel of the instrument.
4. If gas is flowing through the analyzer, you will feel pulses of air being expelled from the exhaust outlet.

If gas flows through the instrument when it is disconnected from its sources of zero air, span gas or sample gas, the flow problem is most likely not internal to the analyzer. Check to make sure that:

- All calibrators/generators are turned on and working correctly.
- Valves, regulators and gas lines are not clogged or dirty.

11.4.1.2. Low Flow

- Check if the pump diaphragm is in good condition. If not, rebuild the pump (call Teledyne API for instructions). Check the spare parts list for information on pump rebuild kits.
- Check for leaks as described in Section 10.3.5. Repair the leaking fitting, line or valve and re-check.
- Check for the sample filter and the orifice filter for dirt. Replace filters (see Sections 10.3.1 and 11.10.1 respectively).
- Check for partially plugged pneumatic lines, orifices or valves. Clean or replace them. The critical orifice should be replaced if it becomes plugged.
- If an IZS option is installed in the instrument, press **CALZ** and **CALS**. If the flow increases then suspect a bad sample/cal valve.

11.4.1.3. High Flow

The most common cause of high flow is a leak in the sample flow control assembly or between there and the pump. If no leaks or loose connections are found in the fittings or the gas line between the orifice and the pump, rebuild the sample flow control assembly as described in Section 11.10.1.

11.4.1.4. Actual Flow Does Not Match Displayed Flow

If the actual flow measured does not match the displayed flow, but is within the limits of 720-880 cc/min, adjust the calibration of the flow measurement as described in Section 11.10.1.

11.4.1.5. Sample Pump

The sample pump should start immediately after the front panel power switch is turned ON. If it does not, refer to Section 11.7.1.

11.5. CALIBRATION PROBLEMS

11.5.1. MISCALIBRATED

There are several symptoms that can be caused by the analyzer being miscalibrated. This condition is indicated by out of range **SLOPE**s and **OFFSET**s as displayed through the test functions and is frequently caused by the following:

- Contaminated span gas. This can cause a large error in the slope and a small error in the offset. Span gas contaminated with a major interferent such as Mercury Vapor, will cause the analyzer to be calibrated to the wrong value.

Also could be caused if the span gas concentration entered into the analyzer during the calibration procedure is not the precise concentration value of the gas used.

- Dilution calibrator not set up correctly or is malfunctioning. This will also cause the slope, but not the zero to be incorrect. Again, the analyzer is being calibrated to the wrong value.
- Too many analyzers on the manifold. This can cause either a slope or offset error because ambient gas with its pollutants will dilute the zero or span gas.
- Contaminated zero gas. This can cause either a positive or negative offset and will indirectly affect the slope. If contaminated with O_3, it will cause a positive offset.

11.5.2. NON-REPEATABLE ZERO AND SPAN

As stated earlier, leaks both in the T400 and in the external system are a common source of unstable and non-repeatable readings.

- Check for leaks in the pneumatic systems as described in Section 10.3.6. Also, consider pneumatic components in the gas delivery system outside the T400, such as:
  - A change in zero air source such as ambient air leaking into zero air line, or;
  - A change in the span gas concentration due to zero air or ambient air leaking into the span gas line.
- Once the instrument passes a leak check, do a flow check (see Section 10.3.6) to make sure adequate sample is being delivered to the optical bench assembly.

- Confirm the sample pressure, sample temperature, and sample flow readings are correct and have steady readings.
- Verify that the sample filter element is clean and does not need to be replaced.

11.5.3. INABILITY TO SPAN – NO SPAN BUTTON (CALS)

- Confirm that the O_3span gas source is accurate. This can be done by inter-comparing the source with another calibrated monitor, or having the O_3 source verified by an independent traceable photometer.
- Check for leaks in the pneumatic systems as described in Section 10.3.4.
- Ensure that the expected span gas concentration entered into the instrument during calibration is not too different from expected span value.
- Check that there is no ambient air or zero air leaking into span gas line.

11.5.4. INABILITY TO ZERO – NO ZERO BUTTON (CALZ)

- Confirm that there is a good source of zero air. If the IZS option is installed, compare the zero reading from the IZS zero air source to the calibration zero air source.
- Check for leaks in the pneumatic systems as described in Section 10.3.4.
- Check to make sure that there is no ambient air leaking into zero air line.

11.6. OTHER PERFORMANCE PROBLEMS

Dynamic problems (i.e. problems that only manifest themselves when the analyzer is monitoring sample gas) can be the most difficult and time consuming to isolate and resolve. The following subsections provide an itemized list of the most common dynamic problems, each related to temperature, with recommended troubleshooting checks and corrective actions.

Individual control loops are used to maintain the set point of the UV Lamp, IZS Ozone Generator (Optional) and Metal Wool Scrubber (Optional) temperatures. If any of these temperatures are out of range or are poorly controlled, the T400 will perform poorly.

11.6.1. BOX TEMPERATURE

The box temperature sensor is mounted to the Motherboard and cannot be disconnected to check its resistance. Rather, check the **BOX TEMP** signal using the **SIGNAL I/O** function under the **DIAG** Menu (see Section 11.1.2).

- This parameter will vary with ambient temperature, but at ~30°C (6-7° above room temperature) the signal should be ~1450 mV.

11.6.2. SAMPLE TEMPERATURE

The Sample Temperature should read approximately 5.0°C higher than the box temperature.

11.6.3. UV LAMP TEMPERATURE

There are three possible causes for the UV Lamp temperature to have failed.

- The UV Lamp heater has failed.
  - Check the resistance between pins 5 and 6 on the six-pin connector adjacent to the UV Lamp on the Optical Bench.
  - It should be approximately 30 Ohms.
- Assuming that the I^2C bus is working and that there is no other failure with the Relay Board, the FET Driver on the Relay Board may have failed.
  - Using the **PHOTO_LAMP_HEATER** parameter under the **SIGNAL I/O** function of the **DIAG** menu, as described above, turn on and off the UV Lamp Heater (D15 on the relay board should illuminate as the heater is turned on).
  - Check the DC voltage present between pins 1 and 2 on J13 of the Relay Board.
  - If the FET Driver has failed, there will be no change in the voltage across pins 1 and 2.
- If the FET Driver Q2 checks out OK, the thermistor temperature sensor in the lamp assembly may have failed.
  - Unplug the connector to the UV Lamp Heater/Thermistor PCB, and measure the resistance of the thermistor between pins 5 and 6 of the six-pin connector.
  - The resistance near the 58°C set point is ~8.1k ohms.

11.6.3.1. IZS Ozone Generator Temperature (Optional)

There are three possible causes for the Ozone Generator temperature to have failed.

- The O_3Gen heater has failed.
  - Check the resistance between pins 5 and 6 on the six-pin connector adjacent to the UV Lamp on the O_3Generator.
  - It should be approximately 5 Ohms.
- Assuming that the I^2C bus is working and that there is no other failure with the Relay Board, the FET Driver on the Relay Board (see Section 11.7.6) may have failed.
  - Using the **O3_GEN_HEATER** parameter under the **SIGNAL I/O** function of the **DIAG** menu, as described above, turn on and off the UV Lamp Heater.
  - Check the DC voltage present between pins 1 and 2 on J14 of the Relay Board.
  - If the FET Driver has failed, there should be no change in the voltage across pins 1 and 2.
- If the FET Driver checks out OK, the thermistor temperature sensor in the lamp assembly may have failed.
  - Unplug the connector to the Ozone Generator Heater/Thermistor PCB, and measure the resistance of the thermistor between pins 5 and 6.

11.7. SUBSYSTEM CHECKOUT

11.7.1. AC MAIN POWER

WARNING – Electrical Shock Hazard

Should the AC power circuit breaker trip, investigate and correct the condition causing this situation before turning the analyzer back on.

The T400 analyzer's electronic systems will operate with any of the specified power regimes. As long as system is connected to 100-120 VAC or 220-240 VAC at either 50 or 60 Hz it will turn on and after about 30 seconds show a front panel display.

- Internally, the status LEDs located on the Relay PCA, Motherboard and CPU should turn on as soon as the power is supplied.
- If they do not, check the circuit breaker built into the ON/OFF switch on the instrument's front panel

The analyzer is correctly configured for the AC mains voltage in use if:

- The Sample Pump is running.

If incorrect power is suspected, check that the correct voltage and frequency is present at the line input on the rear panel.

- Verify that the pump power configuration plug is properly wired (see Section 12.3.6.1)
- If the unit is set for 230 VAC and is plugged into 115 VAC or 100 VAC the sample pump will not start.
- If the unit is set for 115 or 100 VAC and is plugged into a 230 VAC circuit, the circuit breaker built into the ON/OFF Switch on the front panel will trip to the OFF position immediately after power is switched on.

11.7.2. DC POWER SUPPLY

If you have determined that the analyzer's AC mains power is working, but the unit is still not operating properly, there may be a problem with one of the instrument's switching power supplies. The supplies can have two faults, namely no DC output, and noisy output.

To assist tracing DC Power Supply problems, the wiring used to connect the various printed circuit assemblies and DC powered components and the associated test points on the relay PCA follow a standard color-coding scheme as defined in Table 11-6.

Table 11-6: DC Power Test Point and Wiring Color Codes

NAME	TEST POINT#	COLOR	DEFINITION
DGND	**1**	Black	Digital ground
+5V	**2**	Red	
AGND	**3**	Green	Analog ground
+15V	**4**	Blue	
-15V	**5**	Yellow	
+12R	**6**	Purple	12 V return (ground) line
+12V	**7**	Orange	

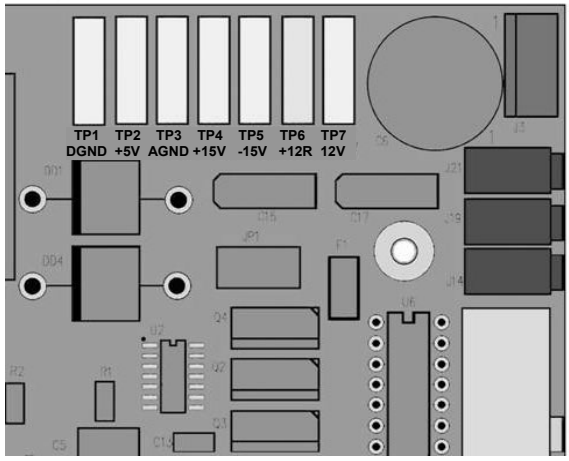

Figure 11-4: Location of DC Power Test Points on Relay PCA

A voltmeter should be used to verify that the DC voltages are correct per the values in the table below, and an oscilloscope, in AC mode, with band limiting turned on, can be used to determine if the supplies are producing excessive noise (> 100 mV p-p).

Table 11-7: DC Power Supply Acceptable Levels

POWER SUPPLY	VOLTAGE	CHECK RELAY BOARD TEST POINTS				MIN V	MAX V
		FROM Test Point		TO Test Point			
		NAME	#	NAME	#		
PS1	+5	DGND	1	+5	2	+4.80	+5.25
PS1	+15	AGND	3	+15	4	+13.5	+16.0
PS1	-15	AGND	3	-15V	5	-14.0	-16.0
PS1	AGND	AGND	3	DGND	1	-0.05	+0.05
PS1	Chassis	DGND	1	Chassis	N/A	-0.05	+0.05
PS2	+12	+12V Ret	6	+12V	7	+11.8	+12.5
PS2	DGND	+12V Ret	6	DGND	1	-0.05	+0.05

11.7.3. I^2C BUS

Operation of the I^2C bus can be verified by observing the behavior of D1 on the relay PCA and D2 on the valve driver PCA in conjunction with the performance of the front panel display.

Assuming that the DC power supplies are operating properly, the I^2C bus is operating properly if:

- If D1 on the relay PCA and is flashing, or
- Pressing a button on the front panel results in a change to the display.

There is a problem with the I^2C bus if D1 on the relay PCA is ON/OFF constantly and pressing a button on the touchscreen DOES NOT result in a change to the display.

If the touchscreen interface is working, but the Watchdog LED is not flashing, the problem may be a wiring issue between the board and the motherboard.

11.7.4. TOUCHSCREEN INTERFACE

Verify the functioning of the touchscreen by observing the display when pressing a touchscreen control button. Assuming that there are no wiring problems and that the DC power supplies are operating properly, but pressing a control button on the display does not change the display, any of the following may be the problem:

- The touchscreen controller may be malfunctioning.
- The internal USB bus may be malfunctioning.

You can verify this failure by logging on to the instrument using APICOM or a terminal program. If the analyzer responds to remote commands and the display changes accordingly, the touchscreen interface may be faulty.

11.7.5. LCD DISPLAY MODULE

Verify the functioning of the front panel display by observing it when power is applied to the instrument. Assuming that there are no wiring problems and that the DC power supplies are operating properly, the display screen should light and show the splash screen and other indications of its state as the CPU goes through its initialization process.

11.7.6. RELAY PCA

The Relay PCA can be most easily checked by observing the condition of the status LEDs on the Relay PCA (see Section 11.3.2), and using the **SIGNAL I/O** submenu under the **DIAG** menu (see Section 11.1.3) to toggle each LED **ON** or **OFF.**

If D1 on the Relay PCA is flashing and the status indicator for the output in question (Heater power, Valve Drive, etc.) toggles properly using the Signal I/O function, then the associated control device on the Relay PCA is bad.

Several of the control devices are in sockets and can be easily replaced. Table 11-8 lists the control device associated with a particular function.

Table 11-8: Relay PCA Control Devices

FUNCTION	CONTROL DEVICE	IN SOCKET
UV Lamp Heater	Q2	No
Optional IZS O_3Gen Heater	Q3	No
Optional Metal Wool Scrubber	K1	Yes
All Valves	U5	Yes

11.7.7. PHOTOMETER PRESSURE /FLOW SENSOR ASSEMBLY

This assembly is only present in analyzers with O_3 generator and/or photometer options installed. The pressure/flow sensor PCA, located at the rear of the instrument between the photometer and the pump (see Figure 3-5), can be checked with a voltmeter. The following procedure assumes that the wiring is intact and that the motherboard as well as the power supplies are operating properly:

BASIC PCA OPERATION:

- Measure the voltage across C2: it should be 5 VDC ± 0.25 VDC. If not, then the board is bad
- Measure the voltage between TP2 and TP1 and also across C1: it should be 10 VDC ± 0.25 VDC. If not, then the board is bad.

PHOTOMETER PRESSURE SENSOR:

1. Measure the pressure on the inlet side of S1 with an external pressure meter.
2. Measure the voltage across TP4 and TP1.
   - The expected value for this signal should be:

$$\text{Expected mVDC} = \left(\frac{\text{Pressure}}{30.0_{\text{In-Hg-A}}} \times 4660_{\text{mvDC}}\right) + 250_{\text{mvDC}} \quad \pm 10\%_{\text{rdg}}$$

EXAMPLE: If the measured pressure is 20 In-Hg-A, the expected voltage level between TP4 and TP1 would be between 2870 mVDC and 3510 mVDC.

EXAMPLE: If the measured pressure is 25 In-Hg-A, the expected voltage level between TP4 and TP1 would be between 3533 mVDC and 4318 mVDC.

   - If this voltage is out of range, then pressure transducer S1 is bad, or the board is bad, or there is a pneumatic failure preventing the pressure transducer from sensing the absorption cell pressure properly.

PHOTOMETER FLOW SENSOR

- Measure the voltage across TP3 and TP1.
  - With proper flow (800 cc^3/min through the photometer), this should be approximately 4.5V (this voltage will vary with altitude).
  - With flow stopped (photometer inlet disconnected or pump turned OFF) the voltage should be approximately 1V.
  - If the voltage is incorrect, the flow sensor S3 is bad, the board is bad or there is a leak upstream of the sensor.

11.7.8. MOTHERBOARD

11.7.8.1. Test Channel / Analog Outputs Voltage

The **ANALOG OUTPUT** submenu, located under the **SETUP → MORE → DIAG** menu is used to verify that the T400 analyzer's three analog outputs are working properly. The test generates a signal on all three outputs simultaneously as shown in Table 11-9.

For each of the steps the output should be within 1% of the nominal value listed in the table below except for the 0% step, which should be within 0mV ±2 to 3 mV. Make sure you take into account any offset that may have been programmed into the analog output channel (see Section 5.10.1.8).

Table 11-9: Analog Output Test Function - Nominal Values Voltage Outputs

		FULL SCALE OUTPUT OF VOLTAGE RANGE (see Section 5.10.1.6)			
		100MV	1V	5V	10V
STEP	%	NOMINAL OUTPUT VOLTAGE			
1	0	0	0	0	0
2	20	20 mV	0.2	1	2
3	40	40 mV	0.4	2	4
4	60	60 mV	0.6	3	6
5	80	80 mV	0.8	4	8
6	100	100 mV	1.0	5	10

If one or more of the steps fails to be within these ranges, it is likely that there has been a failure of the either or both of the DACs and their associated circuitry on the motherboard. To perform the test, connect a voltmeter to the output in question and perform an analog output step test as follows:

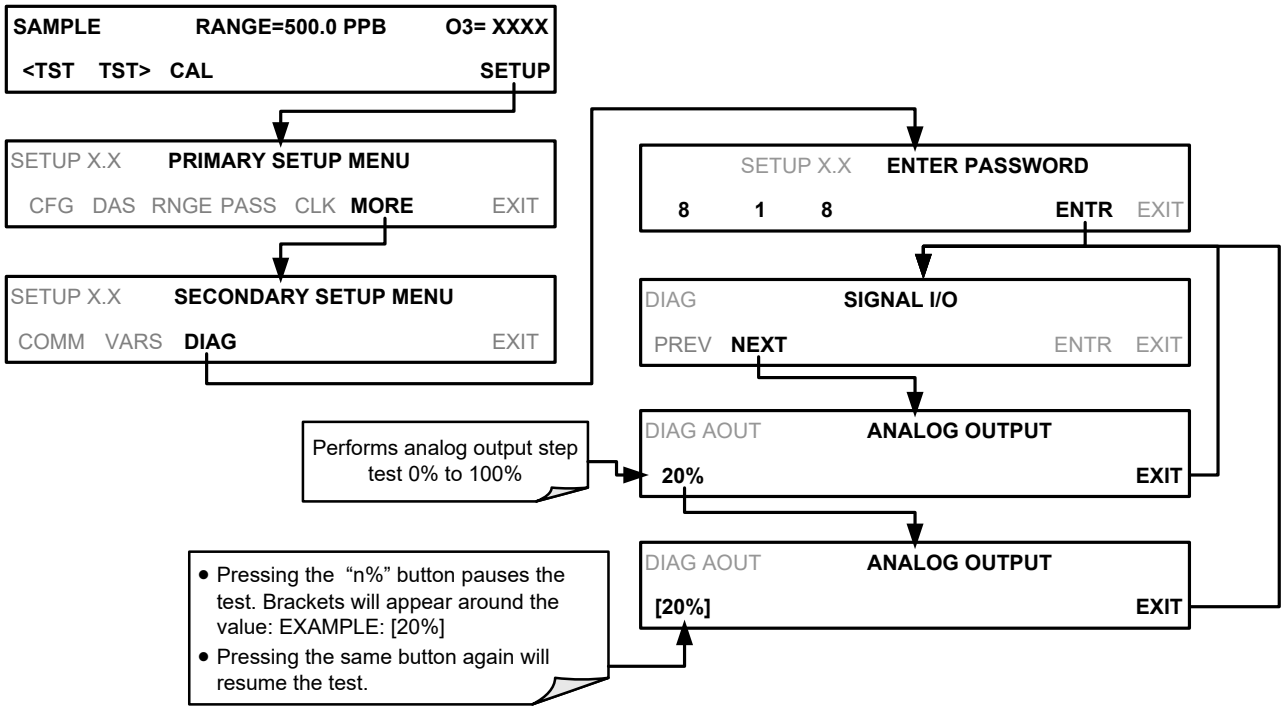

11.7.8.2. **A/D Functions**

The simplest method to check the operation of the A-to-D converter on the motherboard is to use the Signal I/O function under the **DIAG** menu to check the two A/D reference voltages and input signals that can be easily measured with a voltmeter.

1. Use the Signal I/O function (See Section 11.1.3 and Appendix A) to view the value of **REF_4096_MV** and **REF_GND**.
   - If both are within 3 mV of nominal (4096 and 0), and are stable, ±0.5 mV then the basic A/D is functioning properly. If not, then the motherboard is bad.
2. Choose a parameter in the Signal I/O function such as **PHOTO_LAMP_DRIVE or SAMPLE_FLOW**.
   - Compare these voltages at their origin (see the interconnect drawing in Appendix D) with the voltage displayed through the signal I/O function.
   - If the wiring is intact but there is a large difference between the measured and displayed voltage (±10 mV) then the motherboard is bad.

11.7.8.3. **Status Outputs**

To test the status output electronics:

1. Connect a jumper between the "D"pin and the "▽" pin on the status output connector.
2. Connect a 1000 ohm resistor between the "+" pin and the pin for the status output that is being tested.
3. Connect a voltmeter between the "▽" pin and the pin of the output being tested (see table below).
4. Under the **DIAG→ SIGNAL I/O** menu (See Section11.1.3), scroll through the inputs and outputs until you get to the output in question.
5. Alternately, turn on and off the output noting the voltage on the voltmeter.
   - It should vary between 0 volts for ON and 5 volts for OFF.

Table 11-10: Status Outputs Check

PIN (LEFT TO RIGHT)	STATUS
1	**ST_SYSTEM_OK**
2	**ST_CONC_VALID**
3	**ST_HIGH_RANGE**
4	**ST_ZERO_CAL**
5	**ST_SPAN_CAL**
6	**ST_DIAGMODE**
7	**ST_FLOW_ALARM**
8	**ST_PRESS_ALARM**

11.7.8.4. **Control Inputs**

The control input bits can be tested by applying a trigger voltage to an input and watching changes in the status of the associated function under the SIGNAL I/O submenu:

EXAMPLE: to test the "**A**" control input:

1. Under the **DIAG→ SIGNAL I/O** menu (See Section11.1.3), scroll through the inputs and outputs until you get to the output named **EXT_ZERO_CAL**.
2. Connect a jumper from the "**+**" pin on the appropriate connector to the "**U**" on the same connector.
3. Connect a second jumper from the "▽" pin on the connector to the "**A**" pin.
4. The status of **EXT_ZERO_CAL** should change to read "**ON**".

Table 11-11: T400 Control Input Pin Assignments and Corresponding Signal I/O Functions

INPUT	CORRESPONDING I/O SIGNAL
A	EXT_ZERO_CAL
B	EXT_LOW_SPAN_CAL[1]
C	EXT_SPAN_CAL
D, E& F	NOT USED

[1] Only operates if either Z/S or IZS option is installed

11.7.9. **CPU**

There are two major types of CPU board failures: a complete failure and a failure associated with the Disk On Module (DOM). If either of these failures occurs, contact the factory.

For complete failures, assuming that the power supplies are operating properly and the wiring is intact, the CPU is faulty if upon power-on, the watchdog LED on the motherboard is not flashing.

In some rare circumstances, this failure may be caused by a bad IC on the motherboard, specifically U57, the large, 44 pin device on the lower right hand side of the board. If this is true, removing U57 from its socket will allow the instrument to start up but the measurements will be invalid.

If the analyzer stops during initialization (the front panel display shows a fault or warning message), it is likely that the DOM, the firmware, or the configuration and data files have been corrupted.

11.7.10. RS-232 COMMUNICATIONS

11.7.10.1. General RS-232 Troubleshooting

Teledyne API analyzers use the RS-232 communications protocol to allow the instrument to be connected to a variety of computer-based equipment. RS-232 has been used for many years and as equipment has become more advanced, connections between various types of hardware have become increasingly difficult. Generally, every manufacturer observes the signal and timing requirements of the protocol very carefully.

Problems with RS-232 connections usually center around the following general areas:

- Incorrect cabling and connectors. See Section 3.3.1.8 for connector and pin-out information.
- The BAUD rate and protocol are incorrectly configured. See Section 6.2.2.
- If a modem is being used, additional configuration and wiring rules must be observed. See Section 8.3.
- Incorrect setting of the DTE – DCE Switch is set correctly. See Section 6.1.
- Verify that cable (03596) that connects the serial COM ports of the CPU to J12 of the motherboard is properly seated.

11.7.10.2. Troubleshooting Analyzer/Modem or Terminal Operation

To troubleshoot problems with a modem connected to a Teledyne API analyzer:

- Check cables for proper connection to the modem, terminal or computer.
- Check to make sure the DTE-DCE is in the correct position as described in Section 6.1.
- Check to make sure the set up command is correct (See Section 8.3)
- Verify that the Ready to Send (RTS) signal is at logic high. The T400 sets pin 7 (RTS) to greater than 3 volts to enable modem transmission.
- Make sure the BAUD rate, word length, and stop bit settings between modem and analyzer match, See Section 6.2.2.
- Use the RS-232 test function to send “w” characters to the modem, terminal or computer; See Section 6.2.2.
- Get your terminal, modem or computer to transmit data to the analyzer (holding down the space bar is one way); the green LED should flicker as the instrument is receiving data.
- Make sure that the communications software or terminal emulation software is functioning properly.

Note **Further help with serial communications is available in a separate manual “RS-232 Programming Notes” Teledyne API part number 013500000.**

11.8. TROUBLE SHOOTING THE PHOTOMETER

11.8.1. CHECKING MEASURE / REFERENCE VALVE

To check the function of the photometer's measure / reference valve:

1. Set the analyzer's front panel display to show the **O3 REF** test function (see Section 4.1.1).
2. Follow the instruction in Section 9.2.3 for performing a zero point calibration.
   - Press **ZERO** and allow the analyzer to stabilize.
3. Before completing the calibration by pressing the **ENTR** button, note the displayed value.
4. Press the **EXIT** button to interrupt the zero point calibration process (**DO NOT PRESS** the **ENTR** button).
5. Follow the instruction in Section 9.2.3 for performing a span point calibration of the photometer.
   - Press **SPAN** and allow the analyzer to stabilize.
6. Before completing the calibration by pressing the **ENTR** button, note the displayed value for **O3 REF**.
   - If the **O_3 REF** value has decreased by more than 2 mV from its value with zero gas, then there is a "cross-port" leak in the M/R valve or a bad O_3 reference scrubber. Refer to Section 11.10.2 for replacement instructions.
7. Press the **EXIT** button to interrupt the span point calibration process (**DO NOT** PRESS the ENTR button).

11.8.2. CHECKING THE PHOTOMETER UV LAMP POWER SUPPLY

CAUTION - GENERAL SAFETY HAZARD

Do not look at the UV lamp while the unit is operating. UV light can cause eye damage. Always use safety glasses made from UV blocking material when working with the UV Lamp Assembly. (Generic plastic glasses are not adequate).

WARNING – Electrical Shock Hazard

Hazardous voltage present - use caution.

It is not always possible to determine with certainty whether a problem is the result of the UV Lamp or the lamp power supply; however, the following steps will provide a reasonable confidence test of the lamp power supply.

1. Unplug the cable connector at P1 on the lamp power supply and confirm that +15VDC is present between Pins 1 and 2 on the cable connector.
2. If this voltage is incorrect, check the DC test points on the relay PCA as described in Section 11.7.2.

3. Remove the cover of the photometer and check for the presence of the following voltages on the UV lamp power supply PCA (see Figure 12-17):
   - +4500 mVDC ± 10 mVDC between TP1 and TP4 (grnd)
   - If this voltage is incorrect, either the UV lamp power supply PCA is faulty or the I^2C bus is not communicating with the UV lamp power supply PCA.
   - +5VDC between TP3 and TP4 (grnd)
   - If this voltages is less than 4.8 or greater than 5.25 either the 5 VDC power supply or the UV lamp power supply PCA are faulty.
   - If the above voltages check out, it is more likely that a problem is due to the UV lamp than due to the lamp power supply.
   - Replace the lamp and if the problem persists, replace the lamp power supply.

11.9. TROUBLE SHOOTING THE IZS OPTION'S O_3 GENERATOR

The only significant components of the O_3 generator that might reasonably malfunction is the power supply assembly for the UV source lamp and the lamp itself.

11.9.1. CHECKING THE O_3 GENERATOR UV LAMP POWER SUPPLY

The lamp power supply for the IZS option's O_3 generator is the same assembly used for the photometer's lamp power supply. The method for checking it out is identical to that listed in Section 11.8.2 above.

11.10. SERVICE PROCEDURES

11.10.1. REPAIRING SAMPLE FLOW CONTROL ASSEMBLY

The Critical Flow Orifice is part of the Flow Control Assembly located on the sample pump assembly or optionally in the ozone generator for instruments with the IZS option. The jewel orifice is protected by a sintered filter, so it is unusual for the orifice to need replacing, but it is possible for the sintered filter and o-rings to need replacing. See the Spare Parts list in Appendix B for part numbers and kits.

Procedure:

1. Turn off Power to the analyzer.
2. Locate the flow control assembly attached to the sample pump. See Figure 3-5.
3. Disconnect the pneumatic fittings.
4. Remove the assembly from the sample pump by disconnecting the ¼" tube fitting on the pump inlet elbow.
5. The inlet end of the assembly is the straight ¼" tube to 1/8" male NPT fitting. Remove the fitting and the components as shown in the exploded view in the Figure 11-5.
6. Replace the o-rings and the sintered filter.
7. If you are replacing the Critical Flow Orifice itself, make sure that the side with the red colored sapphire jewel is facing downstream to the flow gas flow.
8. Re-assemble in reverse order. See the Spares List in Appendix B for part numbers.

9. After re-connecting the power and pneumatic lines, verify flow rate is between 720 and 880 cc/min.

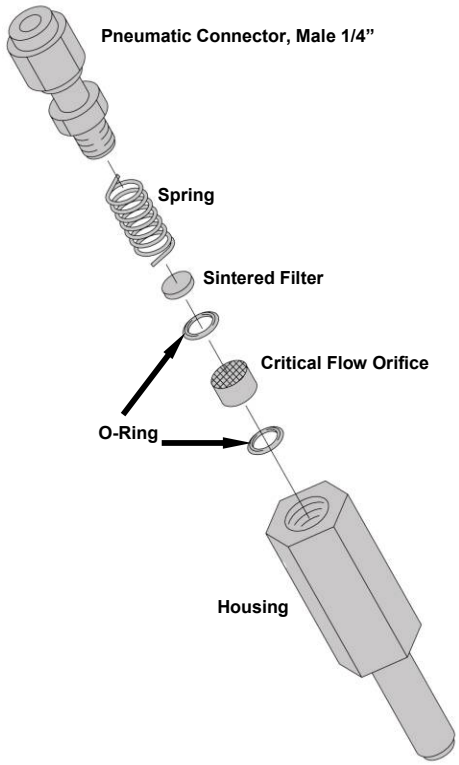

Figure 11-5: Critical Flow Orifice Assembly (Instruments without IZS)

11.10.2. REPLACING THE STANDARD REFERENCE O_3 SCRUBBER

To determine whether the reference O_3 scrubber requires replacement, follow the procedures in Section 11.8.1.

1. Turn off power to the instrument.
2. Remove instrument cover.
3. The reference scrubber is a blue colored canister located at the rear of the measure/reference valve assembly. See Figure 3-5.
4. Disconnect the top 1/8” brass tube fitting from the scrubber.
5. Carefully remove the scrubber from the retaining clip.
6. Remove the bottom 1/8” brass tube fitting from the scrubber.
7. Perform the above steps in reverse to install the new scrubber.

Note **The new scrubber should be allowed to run in the instrument for at least 24 hrs after which the instrument should be re-calibrated.**

11.10.3. REPLACING THE IZS O_3 SCRUBBER

1. Turn off power to the instrument.
2. Remove instrument cover.
3. The IZS zero air scrubber is attached to the brass elbow inlet fitting on the top of the O_3 generator assembly. See Figure 11-6.
4. Disconnect 1/4" Tube Fitting nut on O_3 generator inlet fitting.
5. Disconnect 1/8" tube fitting on the other end of the scrubber.
6. Remove the scrubber and install new scrubber
7. Reassemble by reversing these steps.

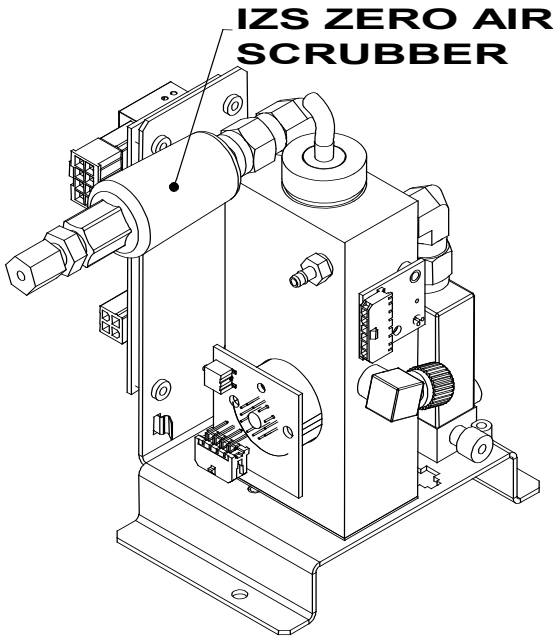

Figure 11-6: IZS O_3 Generator Zero Air Scrubber Location

11.10.4. REPLACING THE METAL WOOL SCRUBBER OPTION

Contact TAPI for instructions on replacing the optional Metal Wool Scrubber.

11.10.5. REPLACING THE UV LAMP DRIVER BOARD

Refer to Figure 11-7 for the following instructions:

1. Power off instrument and remove top.
2. Remove bench Phillips head screws and remove bench cover.
3. Unplug driver board/communications power and lamp power supply connectors.
4. Pop out retaining clip that holds transistor and thermal pad in place.
5. With a blunt tool that will not damage any surface, pry up driver board assembly from swage fittings.
6. Put new driver board assembly lightly in place.
7. Insert thermal pad that's included with driver board replacement kit beneath transistor, lining up their respective holes.

   IMPORTANT: This pad serves as an insulator to prevent electrical shorts.
8. Press driver board assembly onto swage fittings until tightly secure.
9. Return transistor clip securely into place.
10. Reinsert driver board/communications power and lamp power supply connectors.
11. Return bench cover and screw into place.
12. Return cover to instrument.
13. Power on and check readings for accuracy.

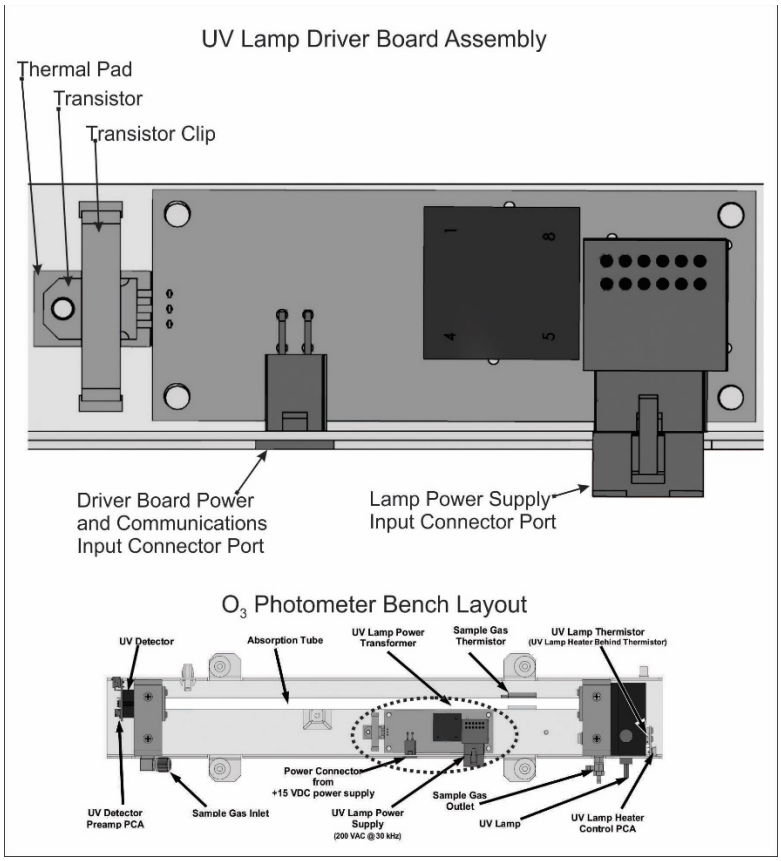

Figure 11-7: UV Lamp Driver Board Replacement

11.10.6. DISK-ON-MODULE REPLACEMENT PROCEDURE

CAUTION

Servicing of circuit components requires electrostatic discharge protection, i.e. ESD grounding straps, mats and containers. Failure to use ESD protection when working with electronic assemblies will void the instrument warranty. Refer to the Primer on Electro-static Discharge manual, downloadable from our website at http://www.teledyne-api.com under Help Center > Product Manuals in the Special Manuals section, for more information on preventing ESD damage.

Replacing the Disk-on-Module (DOM) will cause loss of all DAS data; it may also cause loss of some instrument configuration parameters unless the replacement DOM carries the exact same firmware version. Whenever changing the version of installed software, the memory must be reset. Failure to ensure that memory is reset can cause the analyzer to malfunction, and invalidate measurements. After the memory is reset, the A/D converter must be re-calibrated, and all information collected in Step 1 below must be re-entered before the instrument will function correctly. Also, zero and span calibration should be performed.

1. Document all analyzer parameters that may have been changed, such as range, auto-cal, analog output, serial port and other settings before replacing the DOM
2. Turn off power to the instrument, fold down the rear panel by loosening the mounting screws.
3. When looking at the electronic circuits from the back of the analyzer, locate the Disk-on-Module in the right-most socket of the CPU board.
4. The DOM should carry a label with firmware revision, date and initials of the programmer.
5. Remove the nylon standoff clip that mounts the DOM over the CPU board, and lift the DOM off the CPU. Do not bend the connector pins.
6. Install the new Disk-on-Module, making sure the notch at the end of the chip matches the notch in the socket.
7. It may be necessary to straighten the pins somewhat to fit them into the socket. Press the chip all the way in.
8. Close the rear panel and turn on power to the machine.
9. If the replacement DOM carries a firmware revision, re-enter all of the setup information.

11.11. **FAQ'S**

The following list was compiled from the TAPI Technical Support Department's most commonly asked questions relating to the Model T400 O_3 Analyzer.

QUESTION	ANSWER
How do I get the instrument to zero / Why is the zero button not displayed?	See Section 11.5.4 Inability to zero.
How do I get the instrument to span / Why is the span button not displayed?	See Section11.5.3 Inability to span.
How do I enter or change the value of my Span Gas	Press the **CONC** button found under the **CAL**or **CALS** buttons of the main SAMPLE display menus to enter the expected O_3 span concentration. See Section 9.2.3.1 for more information.
How do I perform a midpoint calibration check?	Midpoint calibration checks can be performed using the instrument's AutoCal feature (see Section 9.4) or by using the control inputs on the rear panel of the instrument (see Section 9.3.3.3). The IZS option is required in order to perform a mid-point span check.
Why does the ENTR button sometimes disappear on the Front Panel Display?	During certain types of adjustments or configuration operations, the **ENTR** button will disappear if you select a setting that is nonsensical (such as trying to set the 24-hour clock to 25:00:00) or out of the allowable range for that parameter (such as selecting an DAS Holdoff period of more than 20 minutes). Once you adjust the setting in question to an allowable value, the **ENTR** button will re-appear.
How do I make the RS-232 Interface Work?	See Section 6.
How do I use the DAS?	See Section 7.
How do I make the instrument's display and my data logger agree?	This most commonly occurs when an independent metering device is used besides the data logger/recorded to determine gas concentration levels while calibrating the analyzer. These disagreements result from the analyzer, the metering device and the data logger having slightly different ground levels.It is possible to enter a DC offset in the analog outputs to compensate. This procedure is located in Section 5.10.1.8 of this manual. Alternately, use the data logger itself as the metering device during calibration procedures.
When should I change the Particulate Filter and how do I change it?	The Particulate filter should be changed weekly. See Section 10.3.1 for instructions on performing this replacement.

When should I change the Sintered Filter and how do I change it?	The Sintered Filter does not require regular replacement. Should its replacement be required as part of a troubleshooting or repair exercise, see Section 11.10.1 for instructions.
When should I change the Critical Flow Orifice and how do I change it?	The Critical Flow Orifice does not require regular replacement. Should its replacement be required as part of a troubleshooting or repair exercise, see Section 11.10.1 for instructions.
How do I set up and use the Contact Closures (Control Inputs) on the Rear Panel of the analyzer?	See Section 3.3.1.6.
Can I automatically calibrate or check the calibration of my analyzer?	Any analyzer into which a Zero/Span Valve Option can be automatically calibrated using the instrument's AutoCal Feature. Be aware that while the AutoCal feature can be used with the IZS Option to perform Calibration Checks, The IZS should never be used to perform Calibrations. See Section 9.4 for instructions on setting up and activating the AutoCal feature.
How often should I rebuild the Sample Pump on my analyzer?	The diaphragm of the Sample Pump should be replaced annually. A sample rebuild kit is available. See Appendix B of this manual for the part number of the pump rebuild kit. Instructions and diagrams are included with the kit.

11.12. TECHNICAL ASSISTANCE

If this manual and its Troubleshooting & Service section does not solve your problems, technical assistance may be obtained from:

TELEDYNE API, TECHNICAL SUPPORT,
9970 CARROLL CANYON ROAD
SAN DIEGO, CALIFORNIA 92131-1106USA
Toll-free Phone: 800-324-5190
Phone: +1 858-657-9800
Fax: +1 858-657-9816
Email: api-techsupport@teledyne.com
Website: http://www.teledyne-api.com/

Before contacting Technical Support, please complete the Product Warranty Repair/Questionnaire on our website at http://www.teledyne-api.com under Service & Support.

.

12. THEORY OF OPERATION

The Model T400 ozone analyzer is a microprocessor-controlled analyzer that determines the concentration of Ozone (O_3) in a sample gas drawn through the instrument. It requires that sample and calibration gasses be supplied at ambient atmospheric pressure in order to establish a stable gas flow through the absorption tube where the gas' ability to absorb ultraviolet (UV) radiation of a certain wavelength (in this case 254 nm) is measured.

Calibration of the instrument is performed in software and does not require physical adjustments to the instrument. During calibration, the microprocessor measures the current state of the UV Sensor output and various other physical parameters of the instrument and stores them in memory.

The microprocessor uses these calibration values, the UV absorption measurements made on the Sample Gas in the absorption tube along with data regarding the current temperature and pressure of the gas to calculate a final O_3 concentration.

This concentration value and the original information from which it was calculated are stored in the unit's Internal Data Acquisition System (DAS - see Section 7) as well as reported to the user via a Front Panel Display or a variety of digital and analog signal outputs.

12.1. MEASUREMENT METHOD

12.1.1. CALCULATING O_3 CONCENTRATION

The basic principle by which the Model T400 Ozone Analyzer works is called Beer's Law (also referred to as the Beer-Lambert equation). It defines how the light of a specific wavelength is absorbed by a particular gas molecule over a certain distance at a given temperature and pressure. The mathematical relationship between these three parameters for gasses at standard temperature and pressure (STP) is:

Equation 12-1

$$I = I_O \, e^{-\alpha LC} \quad \text{at STP}$$

Where:

I_o is the intensity of the light if there was no absorption.

I is the intensity with absorption.

L is the absorption path, or the distance the light travels as it is being absorbed.

C is the concentration of the absorbing gas. In the case of the Model T400, Ozone (O_3).

α is the absorption coefficient that tells how well O_3 absorbs light at the specific wavelength of interest.

To solve this equation for **C**, the concentration of the absorbing Gas (in this case O_3), the application of a little algebra is required to rearrange the equation as follows:

Equation 12-2

$$C = ln\left(\frac{I_0}{I}\right) \times \left(\frac{1}{\alpha L}\right) \quad at\ STP$$

Unfortunately, both ambient temperature and pressure influence the density of the sample gas and therefore the number of ozone molecules present in the absorption tube thus changing the amount of light absorbed.

In order to account for this effect the following addition is made to the equation:

Equation 12-3

$$C = ln\left(\frac{I_0}{I}\right) \times \left(\frac{1}{\alpha L}\right) \times \left(\frac{T}{273K} \times \frac{29.92\ inHg}{P}\right)$$

Where:

T = sample temperature in Kelvin

P = sample pressure in inches of mercury

Finally, to convert the result into parts per billion (PPB), the following change is made:

Equation 12-4

$$C = ln\left(\frac{I_0}{I}\right) \times \left(\frac{10^{-9}}{\alpha L}\right) \times \left(\frac{T}{273K} \times \frac{29.92\ inHg}{P}\right)$$

Briefly, the Model T400 Ozone Analyzer:

- Measures each of the above variables: sample temperature; sample pressure; the intensity of the UV light beam with and without O_3 present,
- Inserts known values for the length of the absorption path and the absorption coefficient, and
- Calculates the concentration of O_3 present in the sample gas.

12.1.2. THE PHOTOMETER UV ABSORPTION PATH

In the most basic terms, the photometer of the Model T400 uses a high energy, mercury vapor lamp to generate a beam of UV light. This beam passes through a window of material specifically chosen to be both non-reactive to O_3 and transparent to UV radiation at 254nm and into an absorption tube filled with Sample Gas.

Because ozone is a very efficient absorber of UV radiation the absorption path length required to create a measurable decrease in UV intensity is short enough (approximately 42 cm) that the light beam is only required to make one pass through the absorption tube. Therefore, no complex mirror system is needed to lengthen the effective path by bouncing the beam back and forth.

Finally, the UV then passes through similar window at the other end of the absorption tube and is detected by a specially designed vacuum diode that only detects radiation at or very near a wavelength of 254nm. The specificity of the detector is high enough that no extra optical filtering of the UV light is needed.

The detector assembly reacts to the UV light and outputs a voltage that varies in direct relationship with the light's intensity. This voltage is digitized and sent to the instrument's CPU to be used in computing the concentration of O_3 in the absorption tube.

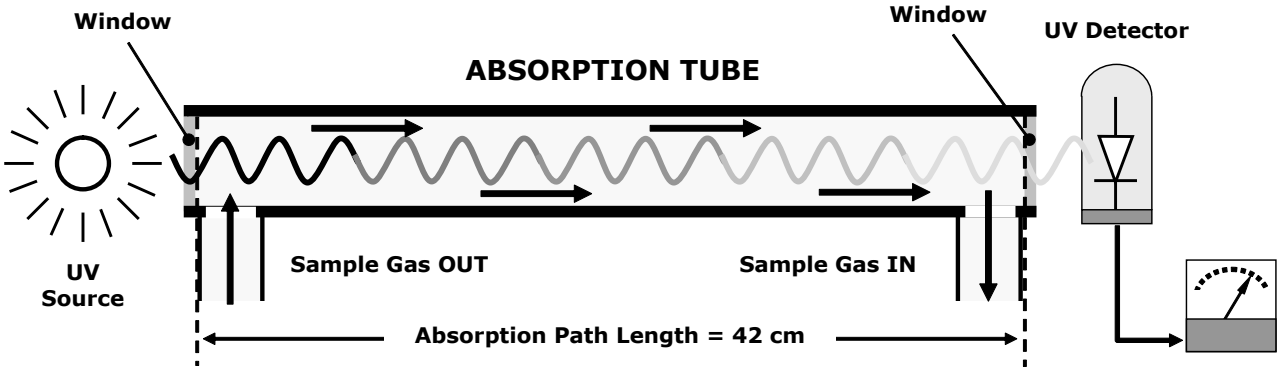

Figure 12-1: O_3 Absorption Path

12.1.3. THE REFERENCE / MEASUREMENT CYCLE

In order to solve the Beer-Lambert equation (see Section 10.1.2) it is necessary to know the intensity of the light passing through the absorption path both when O_3 is present and when it is not. The Model T400 accomplishes this be alternately sending the sample gas directly to the absorption tube and passing it through a chemical scrubber that removes any O_3 present.

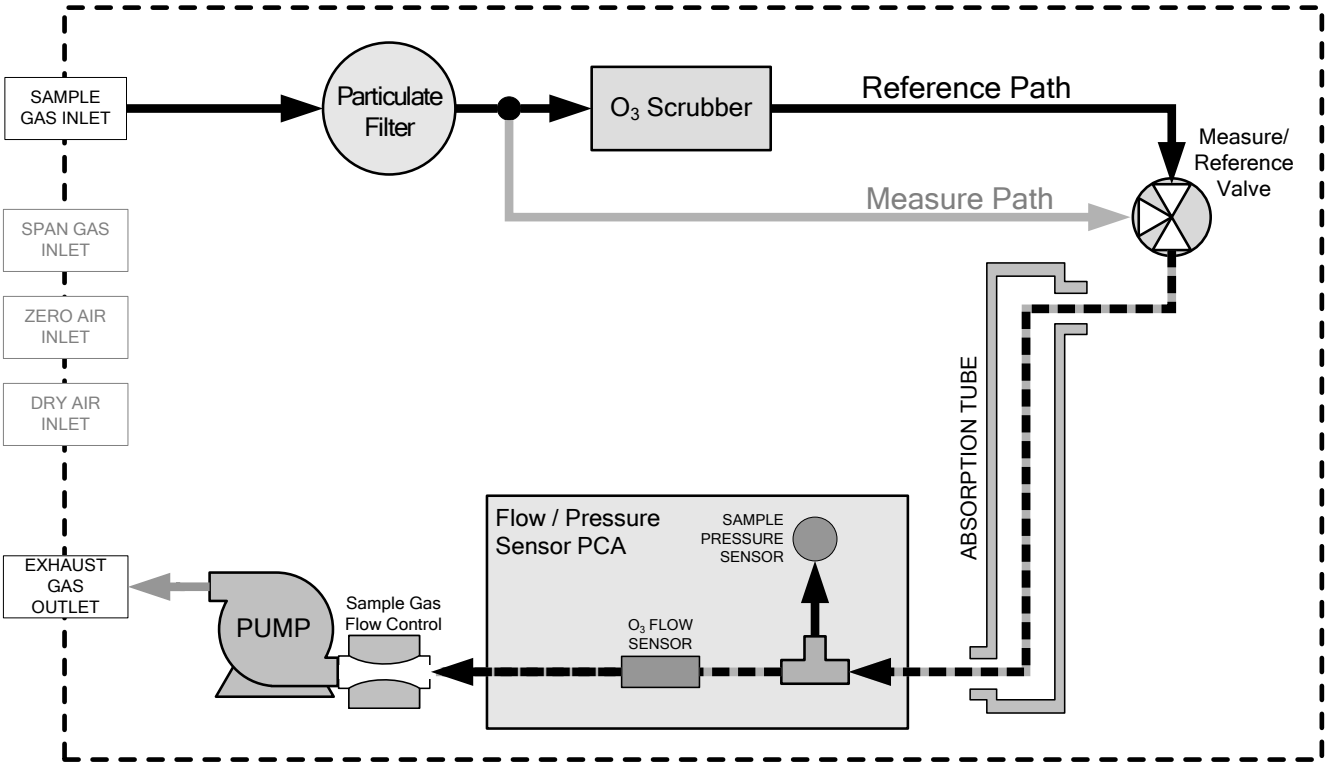

Figure 12-2: Reference / Measurement Gas Cycle

The Measurement / Reference Cycle encompasses the following states and ~durations:

0 seconds	Measure/Reference Valve Opens to the Measure Path.
0 – 2 seconds	Wait Period. Ensures that the Absorption tube has been adequately flushed of any previously present gasses.
2 – 3 seconds	Analyzer measures the average UV light intensity of O_3 bearing Sample Gas (**I**) during this period.
3 seconds	Measure/Reference Valve Opens to the Reference Path.
3 – 5 seconds	Wait Period. Ensures that the Absorption tube has been adequately flushed of O_3 bearing gas.
5 – 6 seconds	Analyzer measures the average UV light intensity of Non-O_3 bearing Sample Gas ($\mathbf{I_0}$) during this period.

CYCLE REPEATs EVERY 6 SECONDS

12.1.4. INTERFERENT REJECTION

The detection of O_3 is subject to interference from a number of sources including, SO_2, NO_2, NO, H_2O, aromatic hydrocarbons such as meta-xylene and mercury vapor. The Model T400's basic method or operation successfully rejects interference from most of these interferents.

The O_3 scrubber located on the reference path (see Figure 12-2) is specifically designed ONLY to remove O_3 from the sample gas. Thus, the variation in intensities of the UV light detected during the instrument's measurement phase versus the reference phase is ONLY due to the presence or absence of O_3. Thus, the effect of interferents on the detected UV light intensity is ignored by the instrument.

Even if the concentration of interfering gases were to fluctuate so wildly as to be significantly different during consecutive reference and measurement phases, this would only cause the O_3 concentration reported by the instrument to become noisy. The average of such noisy readings would still be a relatively accurate representation of the O_3 concentration in the sample gas.

Interference from SO_2, NO_2, NO and H_2O are very effectively rejected by the Model T400. The two types of interferents that may cause problems for the Model T400 are aromatic hydrocarbons and mercury vapor.

AROMATIC HYDROCARBONS

While the instrument effectively rejects interference from meta-xylene, it should be noted that there are a very large number of volatile aromatic hydrocarbons that could potentially interfere with ozone detection. This is particularly true of hydrocarbons with higher molecular weights. If the Model T400 is installed in an environment where high aromatic hydrocarbon concentrations are suspected, specific tests should be conducted to reveal the amount of interference these compounds may be causing.

MERCURY VAPOR

Mercury vapor absorbs radiation in the 254nm wavelength so efficiently that its presence, even in small amounts, will reduce the intensity of UV light to almost zero during both the Measurement and Reference Phases rendering the analyzer useless for detecting O_3.

If the Model T400 is installed in an environment where the presence of mercury vapor is suspected, specific steps MUST be taken to remove the mercury vapor from the sample gas before it enters the analyzer.

12.2. PNEUMATIC OPERATION

Note **It is important that the sample airflow system is both leak tight and not pressurized over ambient pressure. Regular leak checks should be performed on the analyzer as described in the maintenance schedule, Table 10-1. Procedures for correctly performing leak checks can be found in Section 10.3.5.**

12.2.1. SAMPLE GAS AIR FLOW

The flow of sample gas through the T400 analyzer is produced by an internal pump that draws a small vacuum on the downstream side of a critical flow orifice thereby creating a controlled airflow through the analyzer's absorption tube and other components. This requires the analyzer gas inlets be at or near ambient pressure usually managed by placing a vent line on the incoming gas line (see Figure 3-18, Figure 3-19 and Figure 3-23).

By placing the pump down stream from the sample chamber, several problems are avoided.

- First, the pumping process heats and compresses the sample air complicating the measurement process.
- Additionally, certain physical parts of the pump itself are made of materials that might chemically react with the sample gas.
- Finally, in certain applications where the concentration of the target gas might be high enough to be hazardous, maintaining a negative gas pressure relative to ambient means that should a minor leak occur, no sample gas would be pumped into the atmosphere surrounding analyzer.

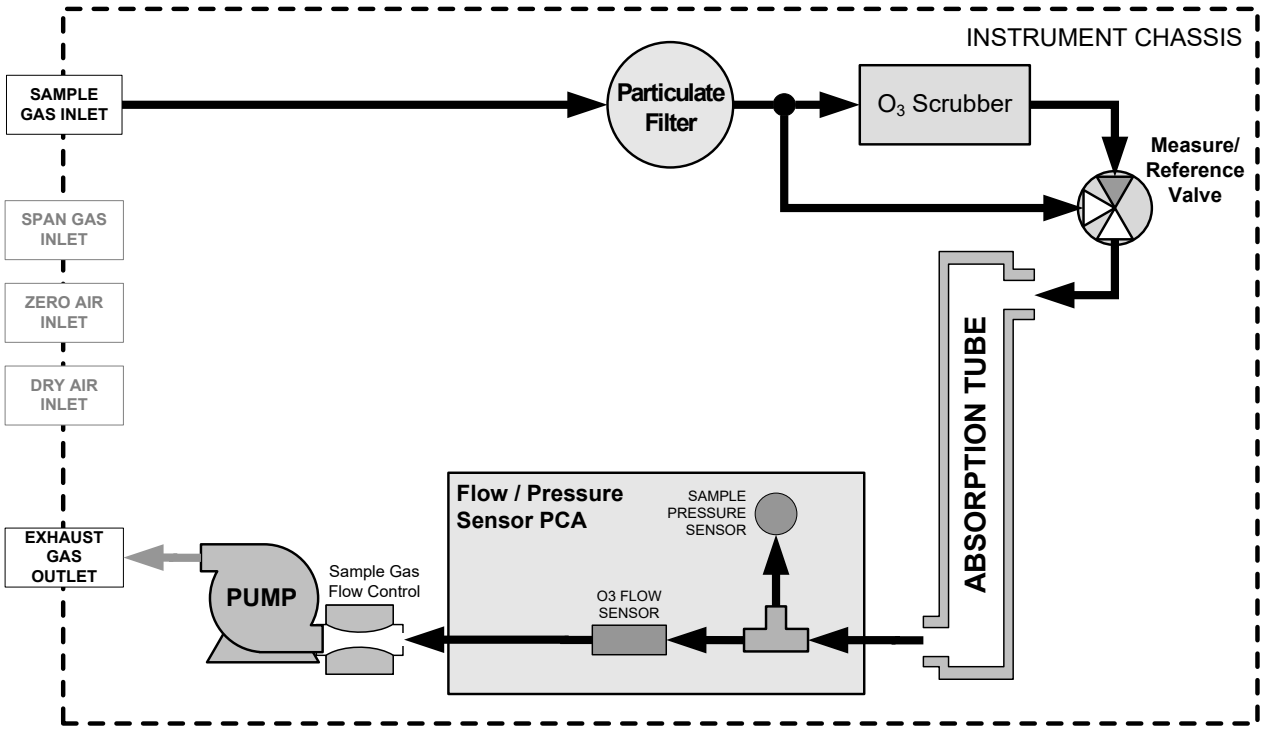

Figure 12-3: T400 Pneumatic Diagram – Basic Unit

12.2.2. **FLOW RATE CONTROL**

To maintain a constant flow rate of the sample gas through the instrument, the Model T400 uses a special flow control assembly located downstream from the absorption tube and in the exhaust gas line just before the pump (see Figure 10-7). This assembly consists of:

- A critical flow orifice.
- Two o-rings: Located just before and after the critical flow orifice, the o-rings seal the gap between the walls of assembly housing and the critical flow orifice.
- A spring: Applies mechanical force needed to form the seal between the o-rings, the critical flow orifice and the assembly housing.

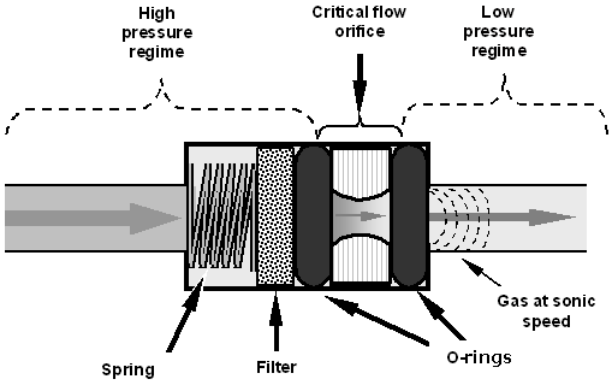

Figure 12-4: Flow Control Assembly & Critical Flow Orifice

12.2.2.1. **Critical Flow Orifice**

The most important component of the flow control assemblies is the critical flow orifice.

Critical flow orifices are a remarkably simple way to regulate stable gas flow rates. They operate without moving parts by taking advantage of the laws of fluid dynamics. By restricting the flow of gas though the orifice, a pressure differential is created. This pressure differential combined with the action of the analyzer's pump draws the gas through the orifice.

As the pressure on the downstream side of the orifice (the pump side) continues to drop, the speed at which the gas flows through the orifice continues to rise. Once the ratio of upstream pressure to downstream pressure is greater than 2:1, the velocity of the gas through the orifice reaches the speed of sound. As long as that ratio stays at least 2:1 the gas flow rate is unaffected by any fluctuations, surges, or changes in downstream pressure because such variations only travel at the speed of sound themselves and are therefore cancelled out by the sonic shockwave at the downstream exit of the critical flow orifice.

The actual flow rate of gas through the orifice (volume of gas per unit of time), depends on the size and shape of the aperture in the orifice. The larger the hole, the more gas molecules (moving at the speed of sound) pass through the orifice. Using this critical flow orifice design extends the useful life of the pump. Once the pump degrades to the point where the sample-to-vacuum-pressure ratio is less than 2:1, a critical flow rate can no longer be maintained.

12.2.3. PARTICULATE FILTER

The Model T400 Ozone Analyzer comes equipped with a 47 mm diameter Teflon particulate filter with a 5-micron pore size. The filter is accessible through the front panel, which folds down to allow access, and should be changed according to the suggested maintenance schedule described in Table 10-1.

12.2.4. PNEUMATIC SENSORS

12.2.4.1. Sample Pressure Sensor

An absolute value pressure transducer plumbed to the outlet of the sample chamber is used to measure sample pressure. The output of the sensor is used to compensate the concentration measurement for changes in air pressure. This sensor is mounted to a printed circuit board next to the internal pump (see Figure 3-5).

12.2.4.2. Sample Flow Sensor

A thermal-mass flow sensor is used to measure the sample flow through the analyzer. The sensor is located downstream from the absorption tube but upstream from the critical flow orifice. This sensor is mounted to the same printed circuit board as the pressure sensor (see Figure 3-5).

12.3. ELECTRONIC OPERATION

12.3.1. OVERVIEW

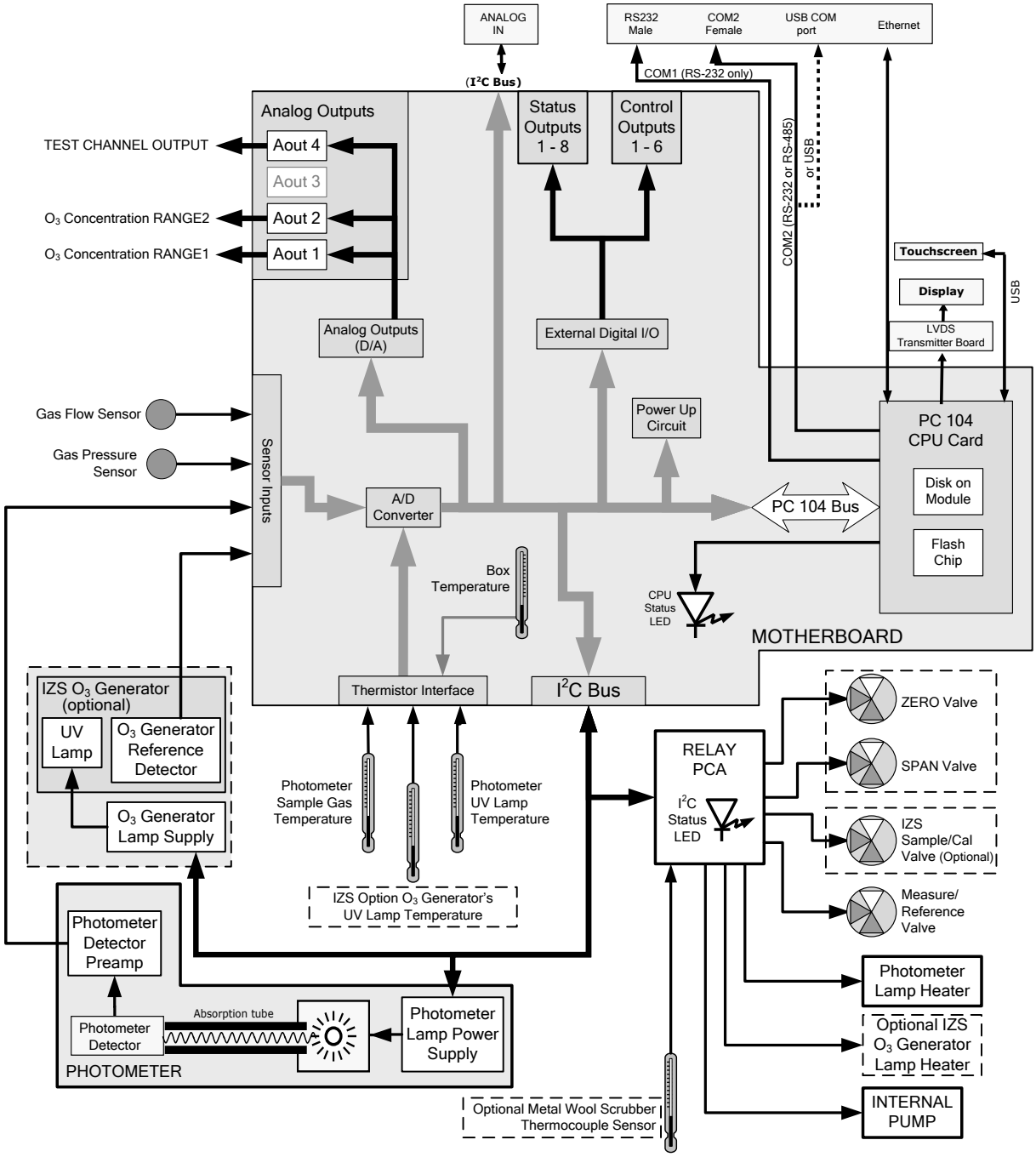

Figure 12-5: T400 Electronic Block Diagram

At its heart, the analyzer is a microcomputer,CPU, that controls various internal processes, interprets data, makes calculations, and reports results using specialized firmware developed by TAPI. It communicates with the user as well as receives data from and issues commands to a variety of peripheral devices via a separate printed circuit assembly called the motherboard.

The motherboard collects data, performs signal conditioning duties and routes incoming and outgoing signals between the CPU and the analyzer's other major components.

An analog signal is generated by an optical bench that includes the Photometer UV Lamp, the Absorption Tube assembly and the UV Detector and Preamp. This signal constantly cycles between a voltage level corresponding to concentration of O_3 in the measure gas and a voltage level corresponding to the lack of O_3 in the reference gas. This signal is transformed converted into digital data by a unipolar, analog-to-digital converter, located on the motherboard.

A variety of sensors report other critical operational parameters, again through the signal processing capabilities of the motherboard. These data are used to calculate O_3 concentration and as trigger events for certain warning messages and control commands issued by the CPU. They are stored in memory by the CPU and in most cases can be viewed by the user via the front panel display.

The CPU communicates with the user and the outside world in a variety of manners:

- Through the analyzer's touchscreen and Liquid Crystal Display (LCD) over a clocked, digital, serial I/O bus (using a protocol called I^2C);
- RS 232 & RS485 Serial I/O channels;
- Various DCV and DCA analog outputs and;
- Several sets of Digital I/O channels.

Finally, the CPU issues commands via a series of relays and switches (also over the I^2C bus) located on a separate printed circuit assembly, called the relay PCA, to control the function of key electromechanical devices such as heaters and valves.

12.3.2. **CPU**

The unit's CPU card, installed on the motherboard located inside the rear panel, is a low power (5 VDC, 720mA max), high performance, Vortex86SX-based microcomputer running Windows CE. Its operation and assembly conform to the PC 104 specification.

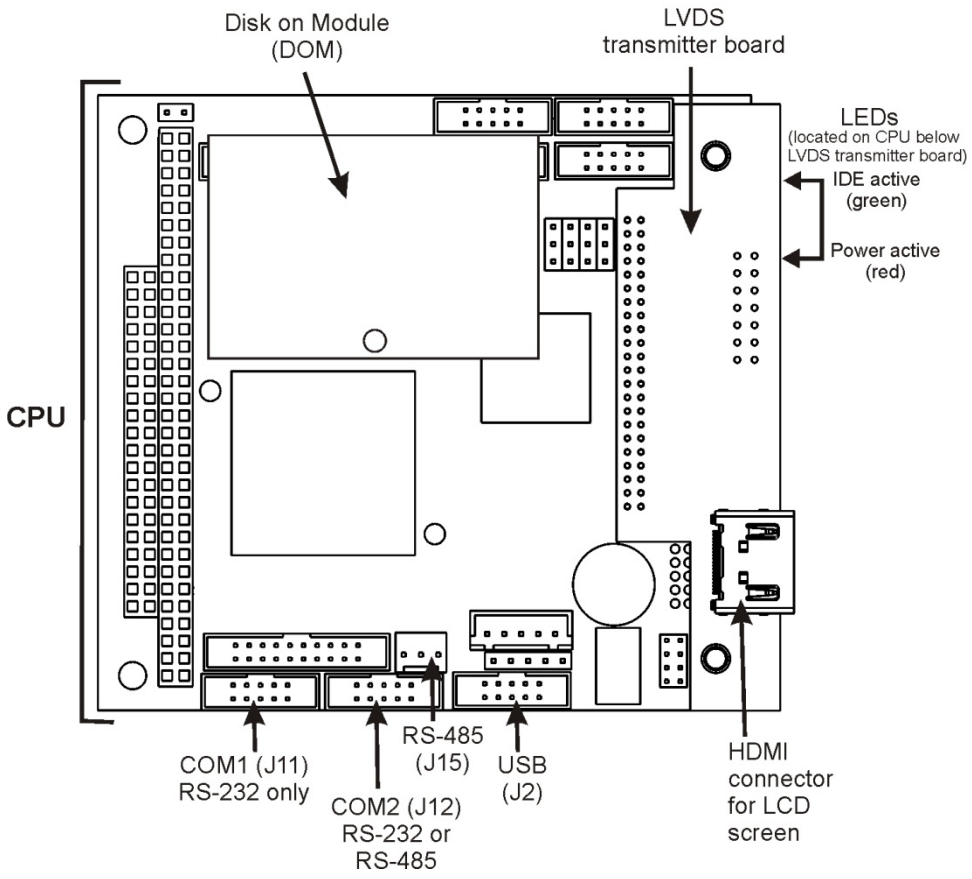

Figure 12-6. CPU Board

The CPU includes two types of non-volatile data storage: Disk-on Module (DOM) and an embedded flash chip.

12.3.2.1. Disk-On-Module (DOM)

The DOM is a 44-pin IDE flash drive with a storage capacity up to 128 MB. It is used to store the computer's operating system, the Teledyne API firmware, and most of the operational data generated by the analyzer's internal data acquisition system (DAS).

12.3.2.2. Flash Chip

This non-volatile, embedded flash chip includes 2 MB of storage for calibration data as well as a backup of the analyzer configuration. Storing these key data onto a less heavily accessed chip significantly decreases the chance of data corruption.

In the unlikely event that the flash chip should fail, the analyzer will continue to operate with just the DOM. However, all configuration information will be lost, requiring the unit to be recalibrated.

12.3.3. MOTHERBOARD

This printed circuit assembly provides a multitude of functions including A/D conversion, digital input/output, PC-104 to I^2C translation, temperature sensor signal processing and is a pass-through for the RS-232 and RS-485 signals.

12.3.3.1. A to D Conversion

Analog signals, such as the voltages received from the analyzer's various sensors, are converted into digital signals that the CPU can understand and manipulate by the analog to digital converter (A/D). Under the control of the CPU, this functional block selects a particular signal input and then coverts the selected voltage into a digital word.

The A/D consists of a voltage-to-frequency (V-F) converter, a programmable logic device (PLD), three multiplexers, several amplifiers and some other associated devices. The V-F converter produces a frequency proportional to its input voltage. The PLD counts the output of the V-F during a specified time, and sends the result of that count, in the form of a binary number, to the CPU.

The A/D can be configured for several different input modes and ranges, but in the T400 it is used in uni-polar mode with a +5V full scale. The converter includes a 1% over and under-range. This allows signals from –0.05V to +5.05V to be fully converted.

For calibration purposes, two reference voltages are supplied to the A/D converter: Reference ground and +4.096 VDC. During calibration, the device measures these two voltages and outputs their digital equivalent to the CPU. The CPU uses these values to compute the converter's offset and slope and applies these factors for subsequent conversions. See Section 5.10.2 for instructions on performing this calibration.

12.3.3.2. Sensor Inputs

The key analog sensor signals are coupled to the A/D through the master multiplexer from two connectors on the motherboard. 100K terminating resistors on each of the inputs prevent cross talk from appearing on the sensor signals.

- O_3 DETECTOR OUTPUT: This is the primary signal used in the computation of the O_3 concentration.
- GAS PRESSURE SENSOR: This sensor measures the gas pressure in the sample chamber upstream of the critical flow orifice (see Figure 3-16). The sample pressure is used by the CPU to calculate O_3 Concentration.
- GAS FLOW SENSOR: This sensor measures the flow rate of the sample gas through the instrument. This information is used as a diagnostic tool for determining gas flow problems.

12.3.3.3. Thermistor Interface

This circuit provides excitation, termination and signal selection for several negative-coefficient, thermistor temperature sensors located inside the analyzer. They are:

- SAMPLE TEMPERATURE SENSOR: The source of this signal is a thermistor attached to the absorption tube inside the optical bench assembly. It measures the temperature of the sample gas in the chamber. This data is used during the calculation of the O_3 concentration value.

- UV LAMP TEMPERATURE SENSOR: This thermistor, attached to the UV lamp in the optical bench, reports the current temperature of the lamp to the CPU as part of the lamp heater control loop.
- IZS LAMP TEMPERATURE SENSOR: This thermistor attached to the UV lamp of the O_3 generator in the IZS option reports the current temperature of that lamp to the CPU as part of a control loop that keeps the lamp temperature constant.
- BOX TEMPERATURE SENSOR: A thermistor is attached to the motherboard. It measures the analyzer's inside temperature. This information is stored by the CPU and can be viewed by the user for troubleshooting purposes via the front panel display. (See Section 11.1.2).

12.3.3.4. **Analog Outputs**

The analyzer comes equipped with three Analog Outputs: **A1**, **A2**, **A4** and a fourth (A3) that is a spare.

- **A1** AND **A2** OUTPUTS: The first two, **A1** and **A2** are normally set up to operate in parallel so that the same data can be sent to two different recording devices. While the names imply that one should be used for sending data to a chart recorder and the other for interfacing with a data logger, either can be used for both applications.

Both of these channels output a signal that is proportional to the O_3 concentration of the Sample Gas. The **A1** and **A2** outputs can be slaved together or set up to operated independently. A variety of scaling factors are available; see Section 5.4 for information on setting the range type and scaling factors for these output channels.

- TEST OUTPUT: The third analog output, labeled **A4** is special. It can be set by the user (see Section 5.10.1.9) to carry the current signal level of any one of the parameters accessible through the **TEST** menu of the unit's software.

In its standard configuration, the analyzer comes with all four of these channels set up to output a DC voltage. However, 4-20mA current loop drivers can be purchased for the first two of these outputs, **A1** and **A2**.

- OUTPUT LOOP-BACK: All three of the functioning analog outputs are connected back to the A/D converter through a loop-back circuit. This permits the voltage outputs to be calibrated by the CPU without need for any additional tools or fixtures.

12.3.3.5. **External Digital I/O**

The External Digital I/O performs two functions.

- STATUS OUTPUTS: Logic-Level voltages are output through an optically isolated 8-pin connector located on the rear panel of the analyzer. These outputs convey good/bad and on/off information about certain analyzer conditions. They can be used to interface with certain types of programmable devices
- CONTROL INPUTS: By connecting these digital inputs to an external source such as a PLC or Data logger, Zero and Span calibrations can be remotely initiated.

12.3.3.6. **I^2C Data Bus**

I^2C is a two-wire, clocked, bi-directional, digital serial I/O bus that is used widely in commercial and consumer electronic systems. A transceiver on the motherboard converts data and control signals from the PC-104 bus to I^2C. The data is then fed to the relay board, optional analog input board and valve driver board circuitry.

12.3.3.7. **Power Up Circuit**

This circuit monitors the +5V power supply during start-up and sets the Analog outputs, External Digital I/O ports, and I^2C circuitry to specific values until the CPU boots and the instrument software can establish control.

12.3.4. **RELAY PCA**

The CPU issues commands via a series of relays and switches located on a separate printed circuit assembly, called the relay PCA, to control the function of key electromechanical devices such as heaters and valves. The relay PCA receives instructions in the form of digital signals over the I^2C bus, interprets these digital instructions and activates its various switches and relays appropriately.

The relay PCA is located in the right-rear quadrant of the analyzer and is mounted vertically on the backside of the same bracket as the instrument's DC power supplies.

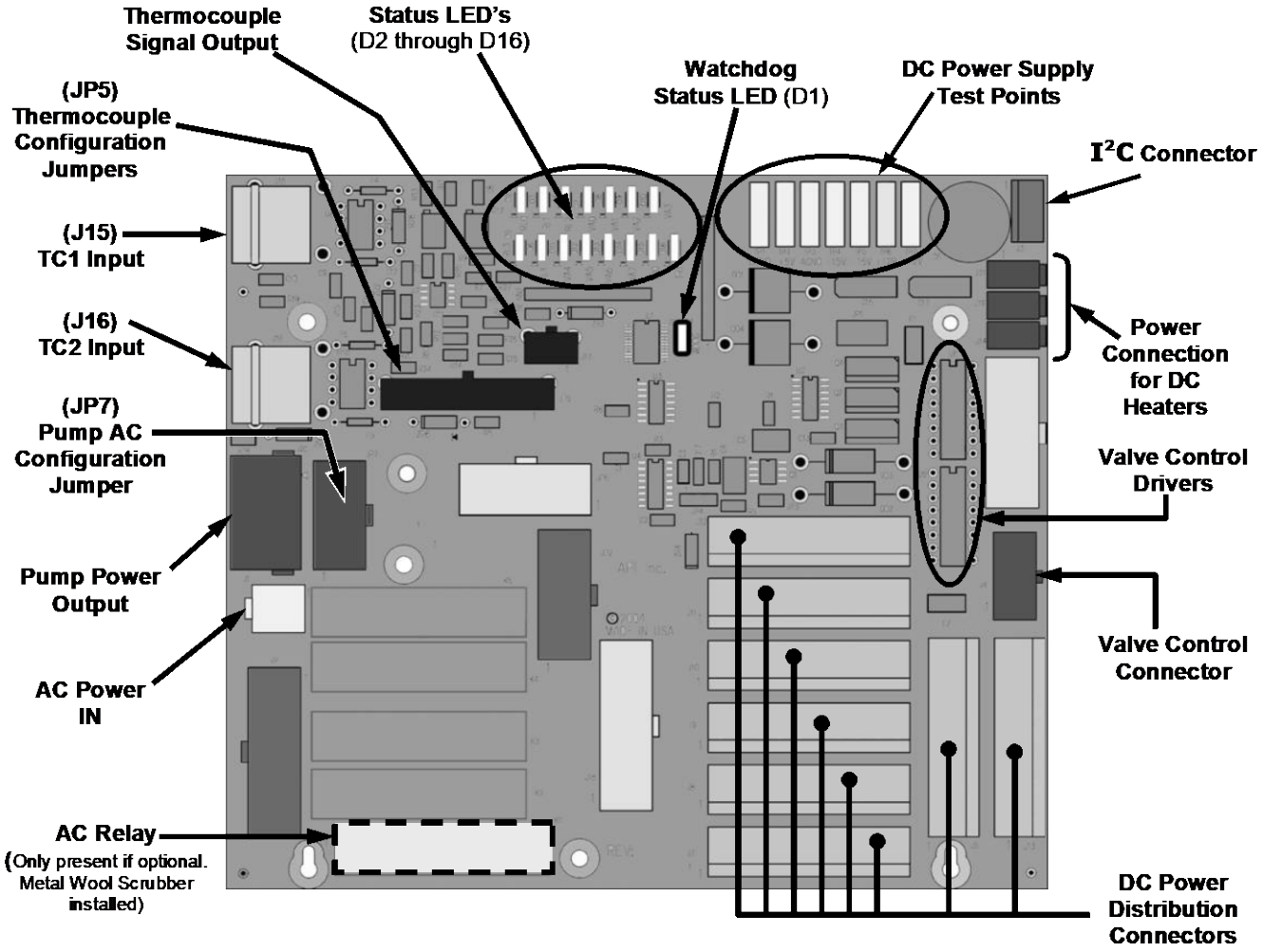

Figure 12-7: Relay PCA Layout (P/N 04523-0100)

The most commonly used version of the Relay PCA installed in the T400 analyzer does not include the AC relays used in instruments where there are AC powered components requiring control. A plastic insulating safety shield covers the empty AC Relay sockets.

WARNING – Electrical Shock Hazard

Never remove this safety shield while the instrument is plugged in and turned on. The contacts of the AC relay sockets beneath the shield carry high AC voltages even when no relays are present

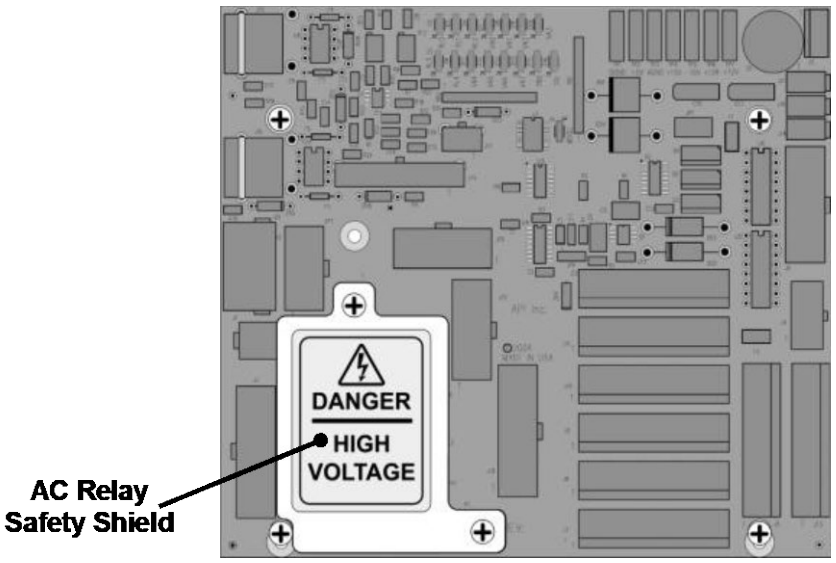

Figure 12-8: Relay PCA P/N 045230100 with Safety Shield In Place

On instruments where the optional Metal Wool Scrubber is installed, the relay PCA includes a solid state AC relay (see Figure 12-7). A retainer plate is installed over the relay to keep them securely seated in their sockets.

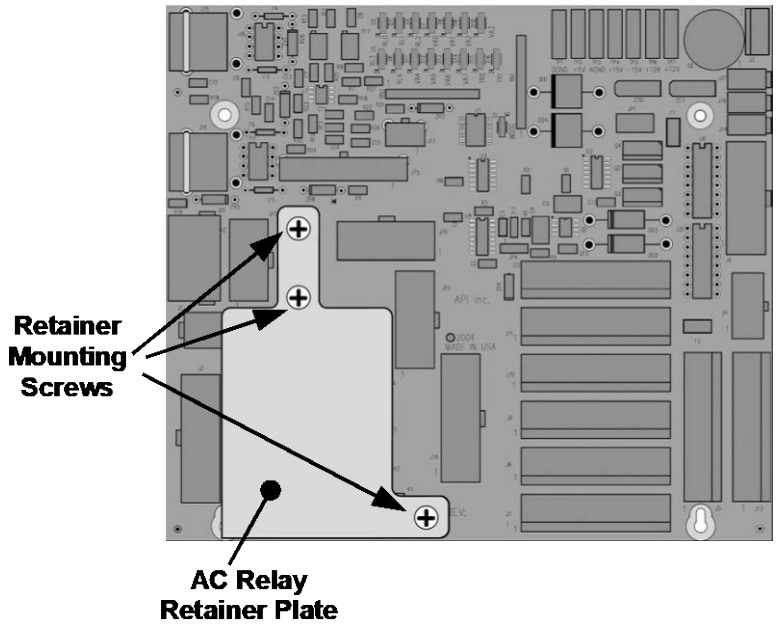

Figure 12-9: Relay PCA P/N 045230200 with AC Relay Retainer in Place

12.3.4.1. Status LEDs

Eight LEDs are located on the Analyzer's relay PCA to show the current status of the various control functions performed by the relay PCA (see Figure 12-10). They are:

Table 12-1: Relay PCA Status LEDs

LED	Color	Function	Status When Lit	Status When Unlit
D1	RED	Watchdog Circuit	Cycles On/Off every 3 seconds under direct control of the analyzer's CPU.	
D2[1]	YELLOW	Metal Wool Scrubber Heater	HEATING	NOT HEATING
D3 – D6	SPARE			
D7	GREEN	Zero/Span Gas Valve[1]	Valve Open to SPAN GAS FLOW	Valve Open to ZERO GAS FLOW
D8	GREEN	Measure/Ref Valve	Valve Open to REFERENCE gas path	Valve Open to MEASURE gas path
D9	GREEN	Sample/Cal Gas Valve[2]	Valve Open to CAL GAS FLOW	Valve Open to SAMPLE GAS FLOW
D10-D14	SPARE			
D15	GREEN	Photometer UV Lamp Heater	HEATING	NOT HEATING
D16	GREEN	IZS O_3 Generator UV Lamp Heater	HEATING	NOT HEATING

[1] Only present when the Z/S valve option is installed.
[2] Only present when either the Z/S valve option or the IZS valve option is present.

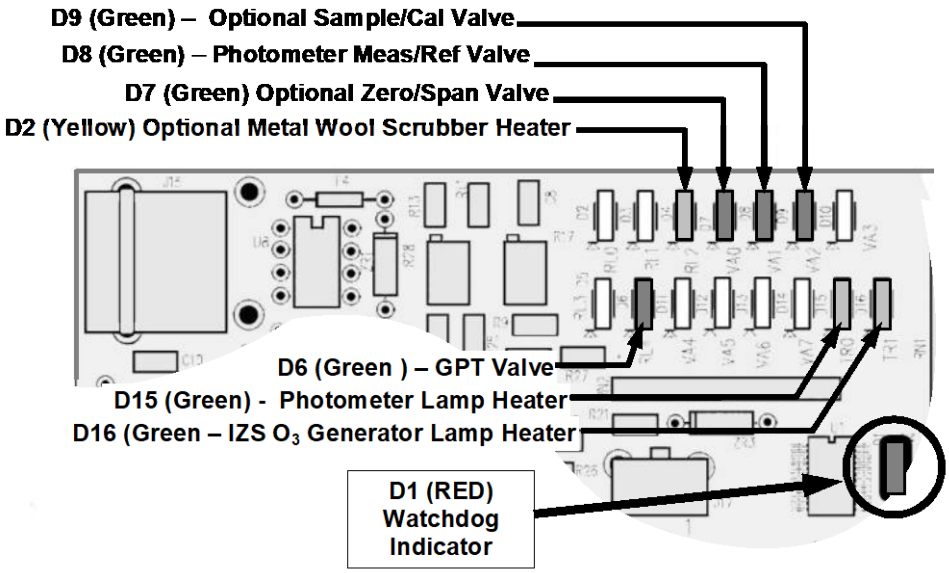

Figure 12-10: Status LED Locations – Relay PCA

12.3.4.2. Watchdog Circuitry

Special circuitry on the relay PCA watches the status of LED D1. Should this LED ever stay **ON** or **OFF** for 30 seconds, the Watchdog Circuit will automatically shut off all valves as well as turn off the UV Source (s) and all heaters. The Sample Pump will still be running.

12.3.4.3. **Valve Control**

The valve that switches the gas stream to and from the analyzer's O_3 scrubber during the measure/reference cycle (see Section 12.1.3) is operated by an electronic switch located on the relay PCA. This switch, under CPU control, supplies the +12VDC needed to activate each valve's solenoid.

Similar valves also controlled by the relay PCA are included in the following optional components:

- On instruments with the **ZERO/SPAN** valve option (OPT- 50A) there are two additional valves:
  - The **ZERO/SPAN** valve selects which calibration gas inlet (the **ZERO** gas inlet or the **SPAN** Gas inlet) is the source of gas when the analyzer is in one of its calibration modes (see Figure 3-22).
  - The **SAMPLE/CAL** valve selects either the sample inlet when the analyzer is in **SAMPLE** mode or the calibration gas stream when the analyzer is in one of its calibration modes (see Figure 3-22).
- On instruments with the **IZS** valve option (OPT- 50G) one additional valve (the **SAMPLE/CAL** valve) selects either the sample inlet when the analyzer is in **SAMPLE** mode or the dry air inlet when the analyzer is in one of its calibration modes (see Figure 3-17).

12.3.4.4. **Heater Control**

In the base version of the Model T400 photometric analyzer, there is only one DC heater operated by the relay PCA. It is attached to the Photometer UV Lamp housing and maintains the temperature of the UV Lamp at a constant 58ºC.

Additional DC heaters also controlled by the relay PCA, are included in the following optional components:

- On instruments with Zero/Span valve option (OPT-50A) the metal wool scrubber option (OPT- 68) there is a DC heater embedded in the scrubber, which maintains it at a constant 110ºC.
- On instruments with the IZS valve option (OPT- 50G) there is a DC heater attached to the IZS O_3 generator UV Lamp, which maintains it at a constant 48ºC

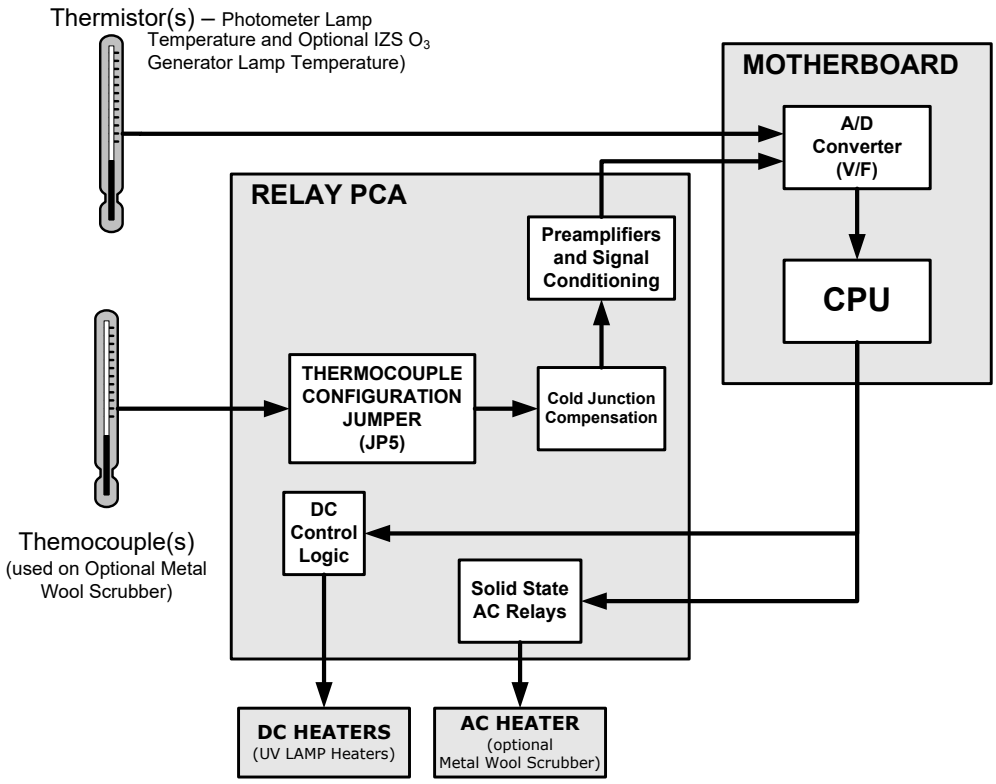

Figure 12-11: Heater Control Loop Block Diagram

12.3.4.5. Thermocouple Inputs and Configuration Jumper (JP5)

In its base configuration, the T400 analyzer does not include any thermocouple sensors; however, in instruments where the optional metal wool scrubber (OPT-68) is installed, one thermocouple is used to sense the temperature of the scrubber. By default, this single thermocouple input is plugged into the TC1 input (J15) on the relay PCA. TC2 (J16) is currently not used.

Table 12-2: Thermocouple Configuration Jumper (JP5) Pin-Outs

TC INPUT	JUMPER PAIR	DESCRIPTION	FUNCTION
TC1	**1 – 11**	Gain Selector	Selects preamp gain factor for J or K TC OUT = K TC gain factor; *IN = J TC gain factor*
	2 – 12	Output Scale Selector	Selects preamp gain factor for J or K TC OUT = 10 mV / °C; *IN = 5 mV / °C*
	3 – 13	*Type J Compensation*	*When present, sets Cold Junction Compensation for J type Thermocouple*
	4 – 14	Type K Compensation	When present, sets Cold Junction Compensation for K type Thermocouple
	5 – 15	Termination Selector	Selects between Isolated and grounded TC IN = Isolate TC; *OUT = Grounded TC*
TC2	NOT USED		

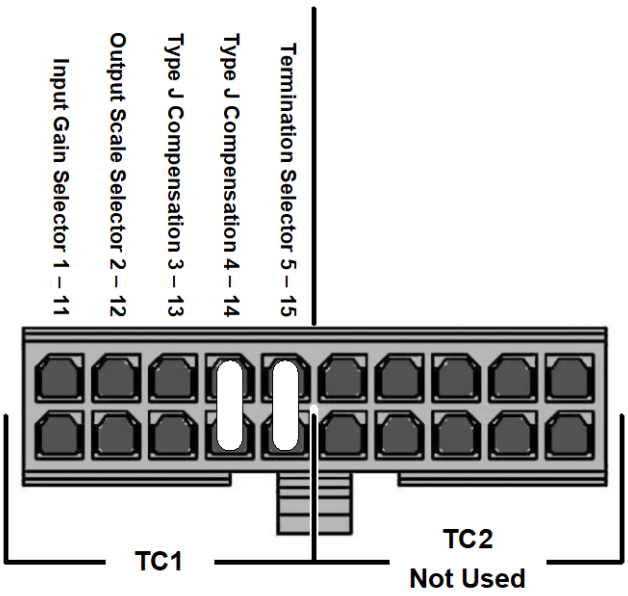

Figure 12-12: Thermocouple Configuration Jumper (JP5) Pin-Outs

Table 12-3: Thermocouple Settings for Optional Metal Wool Scrubber

TC TYPE	TERMINATION TYPE	OUTPUT SCALE TYPE	JUMPER BETWEEN PINS	JUMPER COLOR
K	ISOLATED	10mV / °C	**4 – 14** **5 – 15**	**PURPLE**

12.3.5. POWER SUPPLY/CIRCUIT BREAKER

The analyzer operates on 100 VAC, 115 VAC or 230 VAC power at either 50 Hz or 60Hz. Individual instruments are set up at the factory to accept any combination of these five attributes. Power enters the analyzer through a standard IEC 320 power receptacle located on the rear panel of the instrument. From there it is routed through the ON/OFF Switch located in the lower right corner of the Front Panel.

AC Line power is stepped down and converted to DC power by two DC Power Supplies. One supplies +12 VDC, for various valves and valve options, while a second supply provides +5 VDC and ±15 VDC for logic and analog circuitry as well as the power supplies for the Photometer and IZS UV Lamps.

All AC and DC voltages are distributed via the relay PCA.

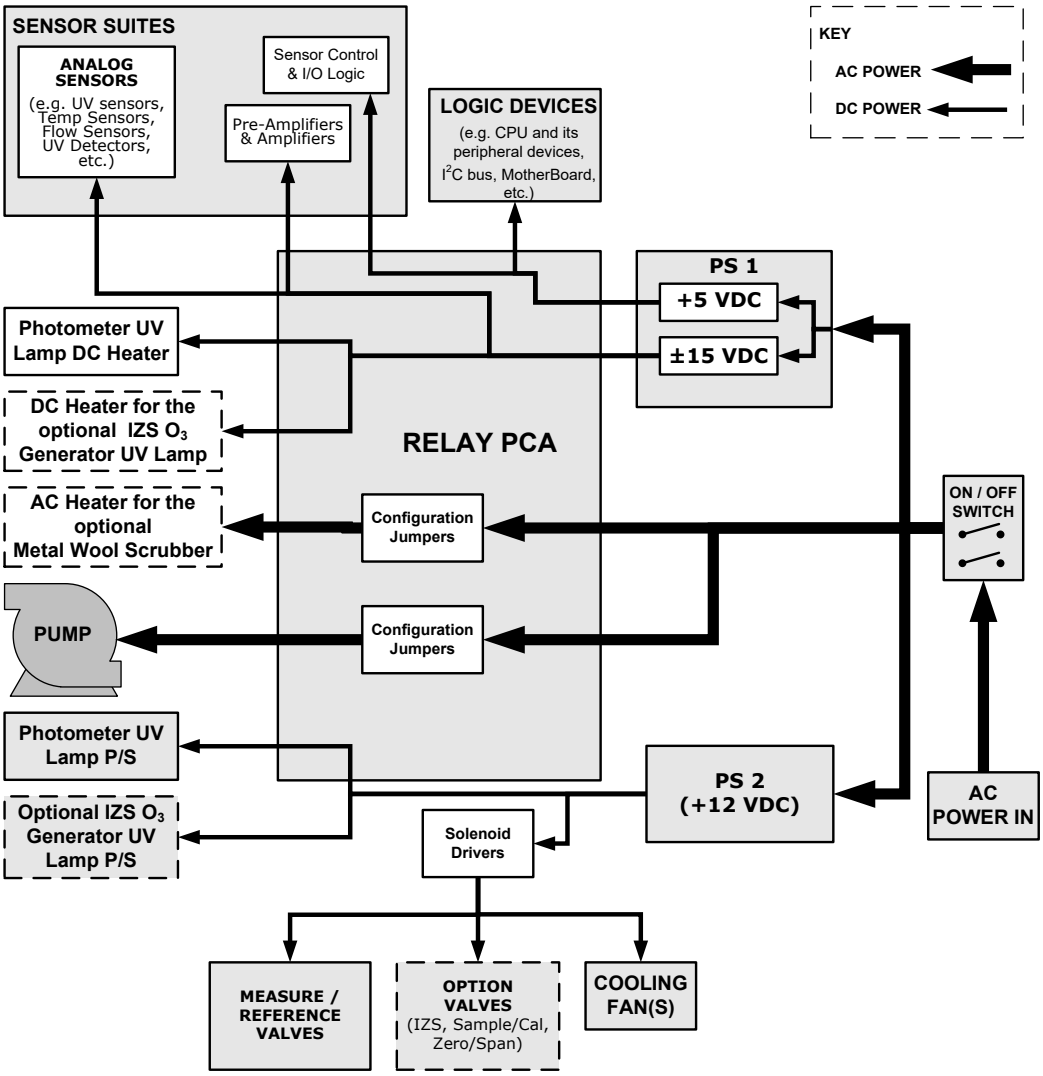

Figure 12-13: Power Distribution Block Diagram

12.3.5.1. **Power Switch/Circuit Breaker**

A 6.75 Amp circuit breaker is built into the ON/OFF Switch.

WARNING – Electrical Shock Hazard

Should the AC power circuit breaker trip, investigate and correct the condition causing this situation before turning the analyzer back on.

12.3.6. AC POWER CONFIGURATION

The T400 analyzer's digital components will operate with any of the specified power regimes. As long as instrument is connected to 100-120 VAC or 220-240 VAC at either 50 or 60 Hz it will turn on and after about 30 seconds show a front panel display. Internally, the status LEDs located on the Relay PCA, Motherboard and CPU should turn on as soon as the power is supplied.

However, some of the analyzer's non-digital components, such as the pump and the AC powered heater for the optional metal wool scrubber (OPT-68) must be properly configured for the type of power being supplied to the instrument.

Configuration of the power circuits is set using several jumper sets located on the instrument's relay PCA.

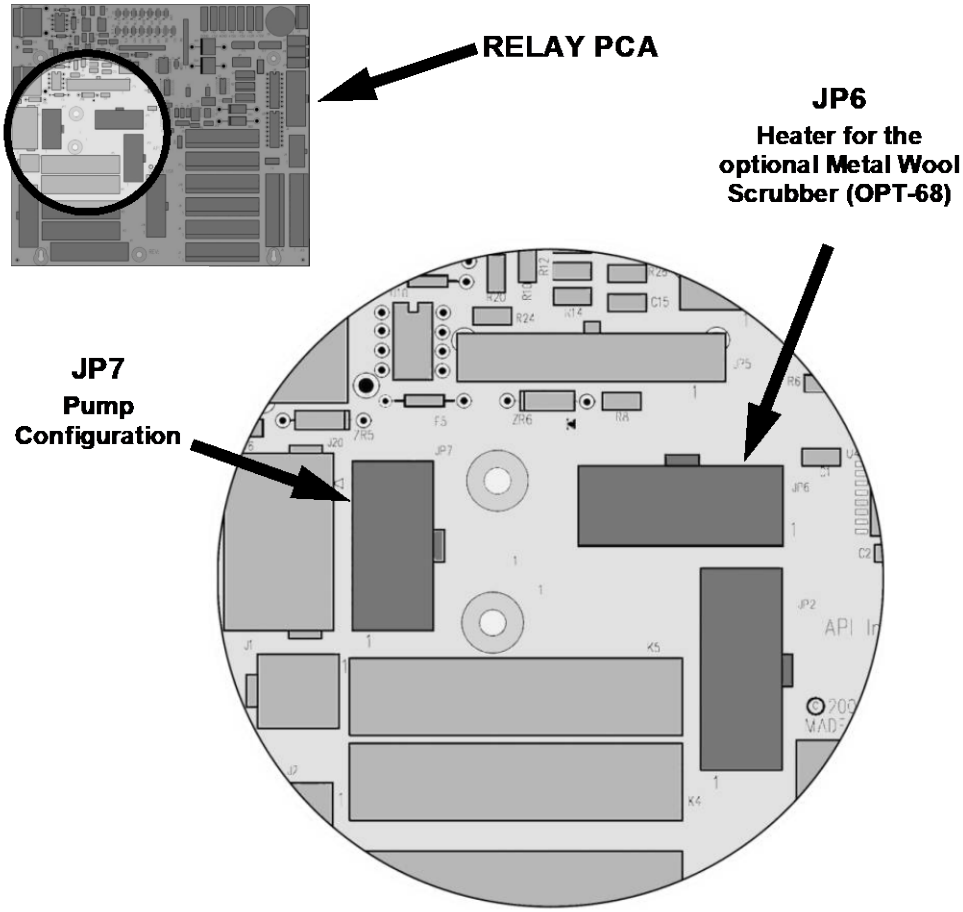

Figure 12-14: Location of AC power Configuration Jumpers

12.3.6.1. AC Configuration – Internal Pump (JP7)

Table 12-4: AC Power Configuration for Internal Pumps (JP7)

LINE POWER	LINE FREQUENCY	JUMPER COLOR	FUNCTION	JUMPER BETWEEN PINS
110VAC 115 VAC	60 HZ	WHITE	Connects pump pin 3 to 110 / 115 VAC power line	2 to 7
			Connects pump pin 3 to 110 / 115 VAC power line	3 to 8
			Connects pump pins 2 & 4 to Neutral	4 to 9
	50 HZ[1]	BLACK	Connects pump pin 3 to 110 / 115 VAC power line	2 to 7
			Connects pump pin 3 to 110 / 115 VAC power line	3 to 8
			Connects pump pins 2 & 4 to Neutral	4 to 9
220VAC 240 VAC	60 HZ	BROWN	Connects pump pins 3 and 4 together	1 to 6
			Connects pump pin 1 to 220 / 240VAC power line	3 to 8
	50 HZ[1]	BLUE	Connects pump pins 3 and 4 together	1 to 6
			Connects pump pin 1 to 220 / 240VAC power line	3 to 8

[1] A jumper between pins 5 and 10 may be present on the jumper plug assembly, but is not functional on the T400.

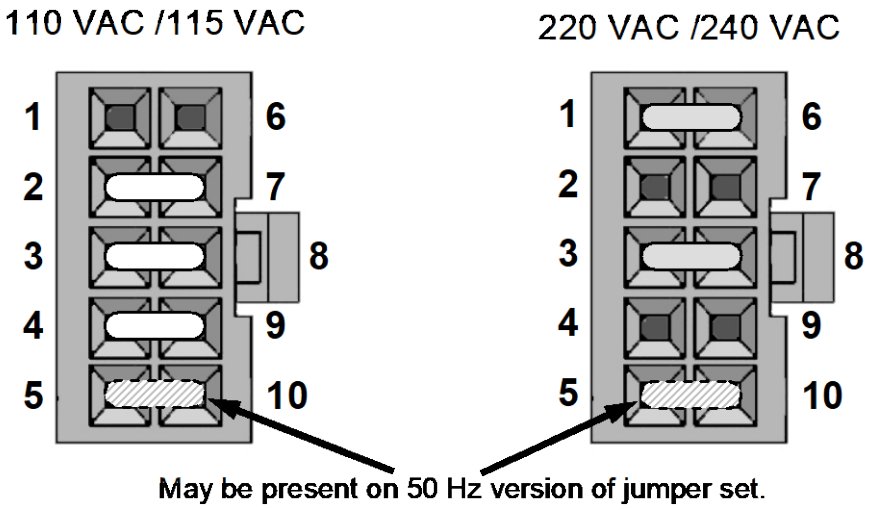

Figure 12-15: Pump AC Power Jumpers (JP7)

12.3.6.2. AC Configuration – Heaters for Option Packages (JP6)

The optional metal wool scrubber (OPT-68) includes an AC heater that maintains the scrubber at an optimum operating temperature. Jumper set JP6 is used to connect the heaters associated with those options to AC power. Since these heaters work with either 110/155 VAC or 220/240 VAC, there is only one jumper configuration.

Table 12-5: Power Configuration for Optional Metal Wool Scrubber Heater (JP6)

JUMPER COLOR	HEATER(S)	JUMPER BETWEEN PINS	FUNCTION
RED	Metal Wool Scrubber Heater	1 to 8	Common
		2 to 7	Neutral to Load

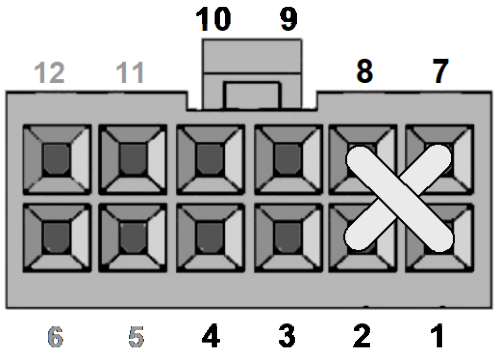

Figure 12-16: Typical Jumper Set (JP2) Set Up of Optional Metal Wool Scrubber Heater

12.3.7. PHOTOMETER LAYOUT AND OPERATION

The Photometer is the component where the absorption of UV light by ozone is measured and converted into a voltage. It consists of several sub-assemblies:

- A mercury-vapor UV lamp. This lamp is coated in a material that optically screens the UV radiation output to remove the O_3 producing 185nm radiation. Only light at 254nm is emitted.
- An AC power supply to supply the current for starting and maintaining the plasma arc of the mercury vapor lamp.
- A thermistor and DC heater attached to the UV lamp to maintain the lamp at an optimum operating temperature.
- 42 cm long quartz absorption tube.
- A thermistor attached to the quartz tube for measuring sample gas temperature.
- Gas inlet and outlet mounting blocks that route sample gas into and out of the photometer.
- The vacuum diode, UV detector that converts UV light to a DC current.
- A preamplifier assembly, which convert the Detector's current output into a DC Voltage then amplifies it to a level readable by the A-to-D converter circuitry of the instrument's motherboard.

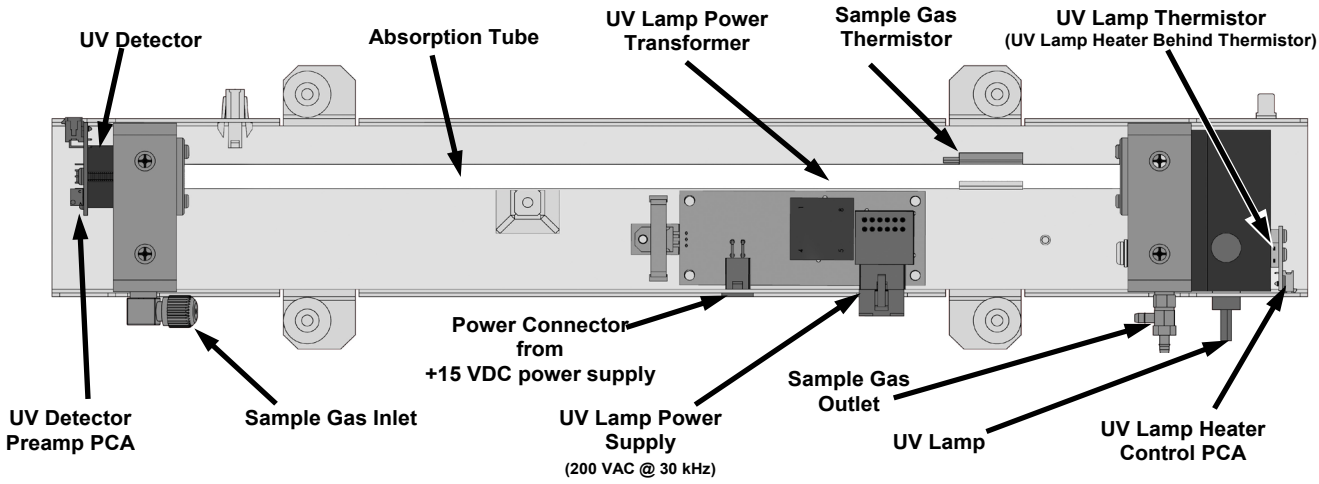

Figure 12-17: O_3 Photometer Layout – Top Cover Removed

CAUTION – UV Radiation Risk
Do not look directly at the light of the UV lamp.

12.3.7.1. **Photometer Electronic Operation**

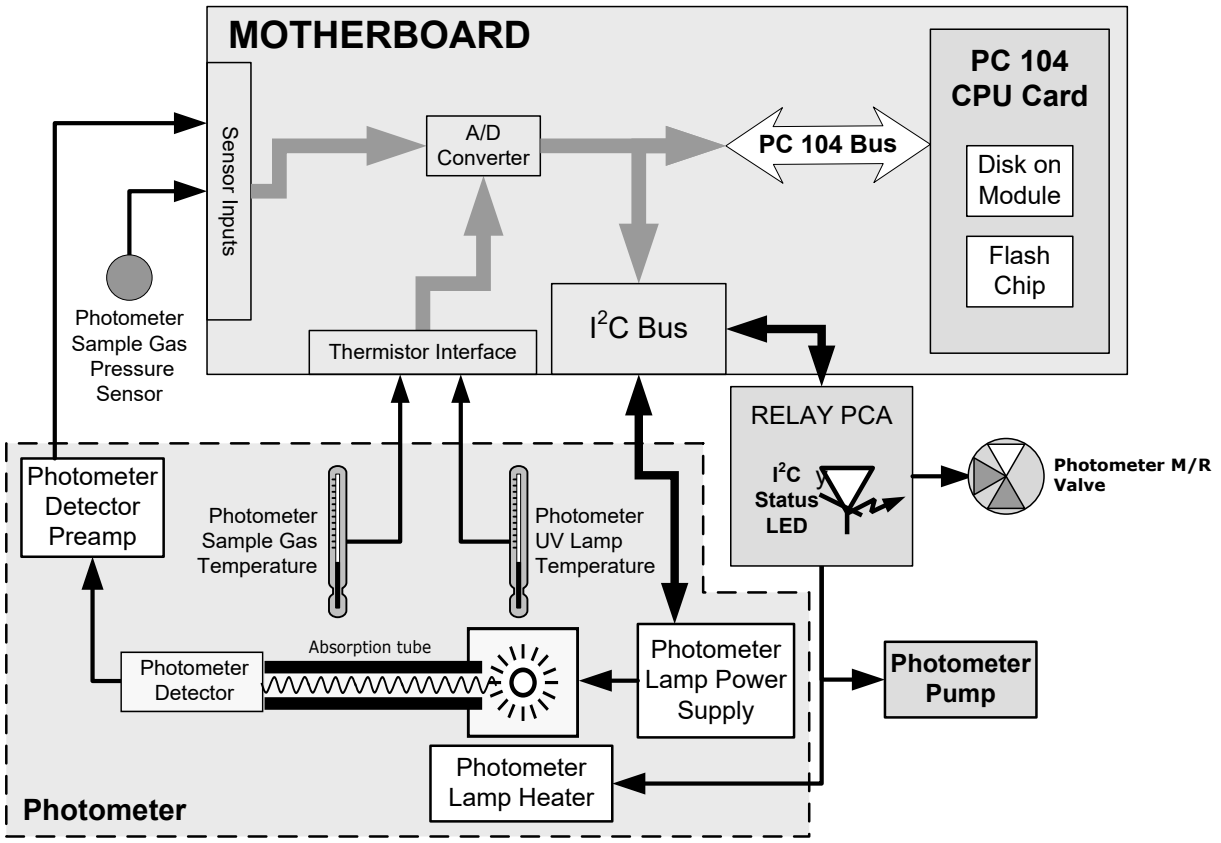

Figure 12-18: O_3 Photometer Electronic Block Diagram

The O_3 photometer and its subcomponents act as peripheral devices operated by the CPU via the motherboard. Communications to and from the CPU are handled by the motherboard.

Outgoing commands for the various devices such as the photometer pump, the UV lamp power supply, and the U\V Lamp heater are issued via the I^2C bus to circuitry on the relay PCA which turns them ON/OFF. The CPU also issues commands over the I^2C bus that cause the relay PCA to cycle the measure/reference valve back and forth.

Incoming data to the UV light detector is amplified locally then converted to digital information by the motherboard. Output from the photometers temperature sensors is also amplified and converted to digital data by the motherboard. The O_3 concentration of the sample gas is computed by the CPU using this data along with gas pressure and flow data received from the instrument's pressure sensors.

12.3.7.2. O_3 Photometer UV Lamp Power Supply

The photometer's UV lamp requires a high voltage AC supply voltage to create and maintain its mercury vapor plasma arc. This AC voltage is produced by a variable transformer, the primary of which is supplied by the output of a DC regulator (powered by the instrument's +15 VDC supply). A circuit made up of a control IC and several FET's, turns the transformer on and off converting it into a 30kHz square wave.

The DC regulator is controlled by a drive voltage supplied by an amplifier that adjusts its output based on the difference between the rectified current output of the lamp and a constant voltage resulting from a D-to-A converted "set-point" signal sent by the CPU via the I^2C bus. If the rectified current output by the lamp is lower than the CPU set point voltage, the amplifier drives the regulator output voltage higher. If the rectified current output is higher than the set point voltage, the amplifier decreases the regulator output voltage.

At start up, when there is no mercury vapor arc and therefore no current being output by the lamp, the amplifier continues to drive the regulator output (and therefore the transformer output) higher and higher until the mercury is vaporized and the plasma arc is created (about 800 VAC). Once the arc is created, current begins to flow and the error amplifier reduces the regulator/transformer output to a steady 200 VAC.

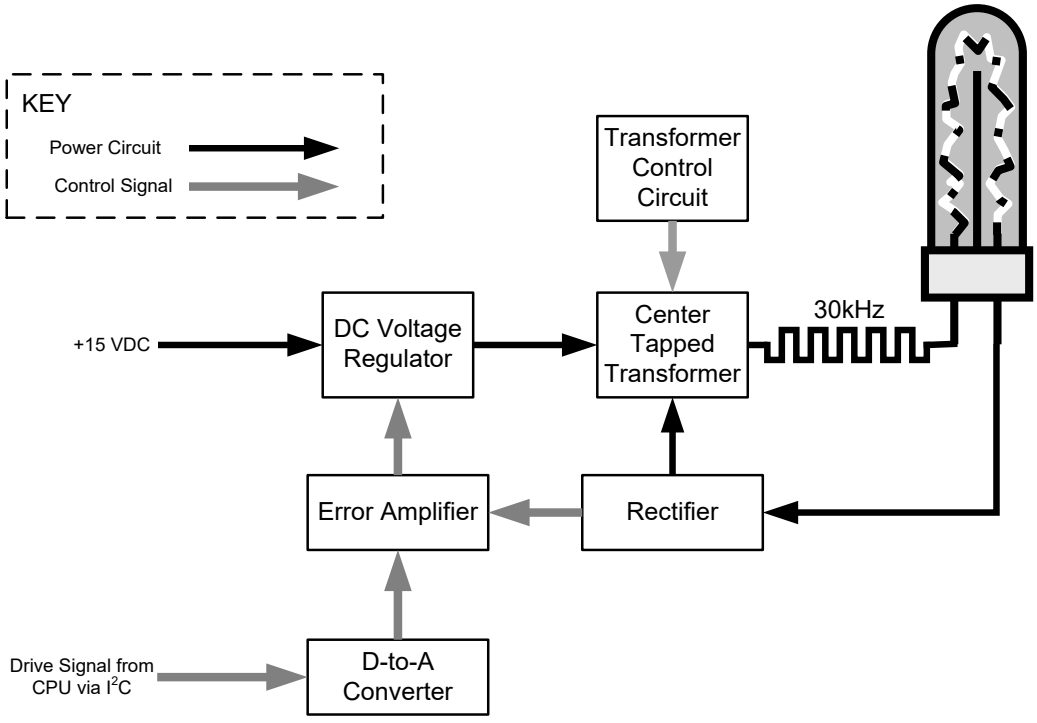

Figure 12-19: O_3 Photometer UV Lamp Power Supply Block Diagram

12.3.7.3. **Photometer Temperature**

In order to operate at peak efficiency the UV lamp of the instrument's O_3 photometer is maintained at a constant 58ºC. This is intentionally set at a temperature higher than the ambient temperature of the T400's operating environment to make sure that local changes in temperature do not affect the UV Lamp. If the lamp temperature falls below 56ºC or rises above 61ºC a warning is issued by the analyzer's CPU.

This temperature is controlled as described in the section on the relay PCA (Section 12.3.4.4).

The following TEST functions report these temperatures and are viewable from the instrument's front panel:

- **PHOTO LAMP** - The temperature of the UV Lamp reported in ºC.
- **SAMPLE TEMP** - The temperature of the Sample gas in the absorption tube reported in ºC.

12.3.7.4. **Photometer Gas Pressure and Flow Rate**

The sensors mounted to a printed circuit board next to the internal pump (see Figure 3-5) measure the absolute pressure and the flow rate of gas inside the photometer's absorption tube. This information is used by the CPU to calculate the O_3 concentration of the sample gas (See Equation 12-3). Both of these measurements are made downstream from the absorption tube but upstream of the pump. A critical flow orifice located between the flow sensor and the pump maintains the gas flow through the photometer at 800 cm^3/min.

The following TEST functions are viewable from the instrument's front panel:

- **SAMP FL**- The flow rate of gas through the photometer measured in LPM.
- **PRES** – The pressure of the gas inside the absorption tube. This pressure is reported in inches of mercury-absolute (**in-Hg-A**), i.e. referenced to a vacuum (zero absolute pressure). This is not the same as **PSIG.**

Note

The T400 displays all pressures in inches of mercury-absolute (in-Hg-A). Absolute pressure is the reading referenced to a vacuum or zero absolute pressure. This method was chosen so that ambiguities of pressure relative to ambient pressure can be avoided.

For example:

If the vacuum reading is 25" Hg relative to room pressure at sea level, the absolute pressure would be 5" Hg.

If the same absolute pressure were observed at 5000 ft altitude where the atmospheric pressure was 5" lower, the relative pressure would drop to 20" Hg; however, the absolute pressure would remain the same: 5" Hg-A.

12.4. FRONT PANEL TOUCHSCREEN/DISPLAY INTERFACE

Users can input data and receive information directly through the front panel touchscreen display. The LCD display is controlled directly by the CPU board. The touchscreen is interfaced to the CPU by means of a touchscreen controller that connects to the CPU via the internal USB bus and emulates a computer mouse.

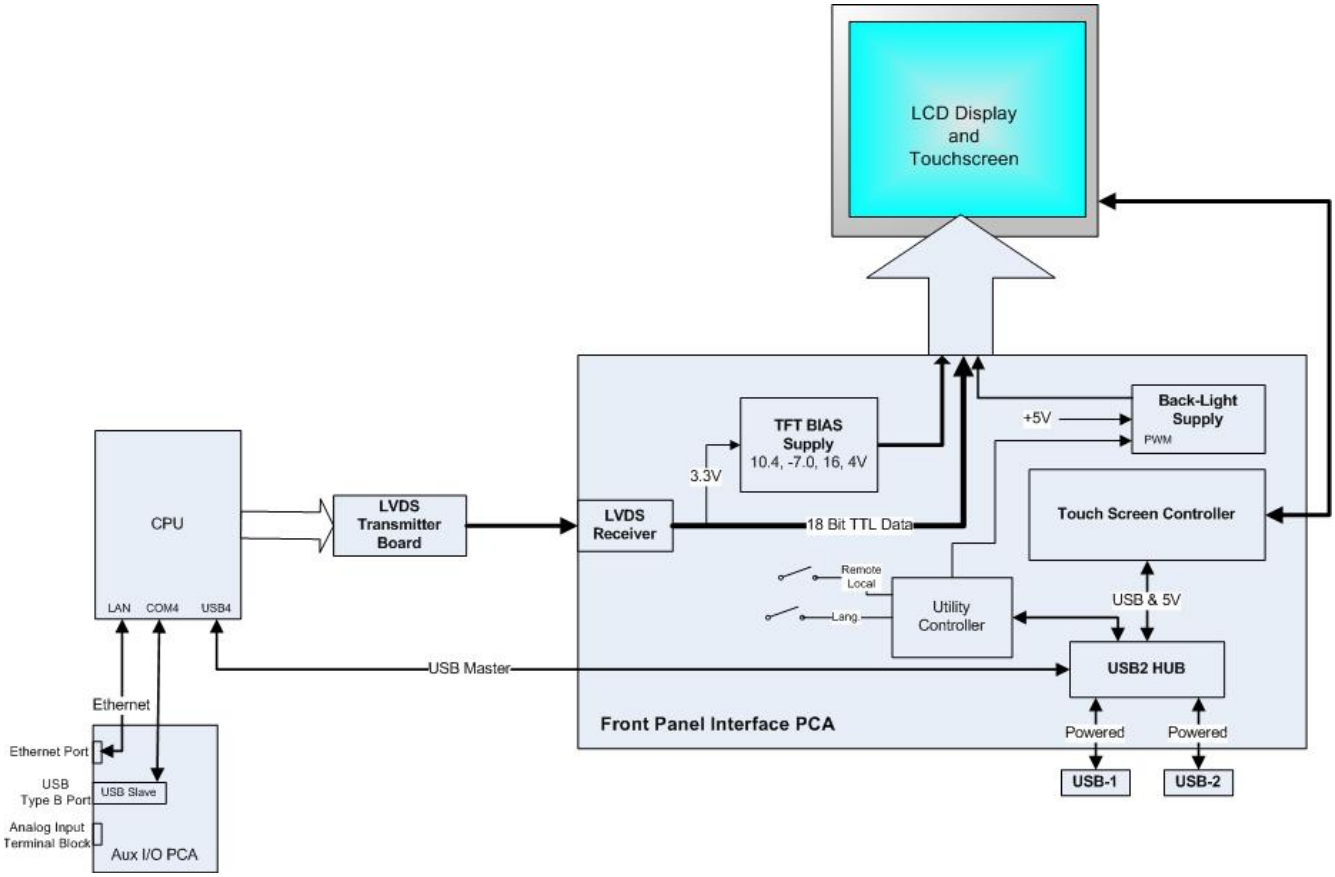

Figure 12-20: Front Panel and Display Interface Block Diagram

12.4.1. FRONT PANEL INTERFACE PCA

The front panel interface PCA controls the various functions of the display and touchscreen. For driving the display it provides connection between the CPU video controller and the LCD display module. This PCA also contains:

- power supply circuitry for the LCD display module
- a USB hub that is used for communications with the touchscreen controller and the two front panel USB peripheral device ports
- the circuitry for powering the display backlight

12.5. SOFTWARE OPERATION

The instrument's core module is a high performance, X86-based microcomputer running Windows CE. Inside Windows CE, special software developed by Teledyne API interprets user commands from the various interfaces, performs procedures and tasks,

stores data in the CPU's various memory devices, and calculates the concentration of the gas being sampled.

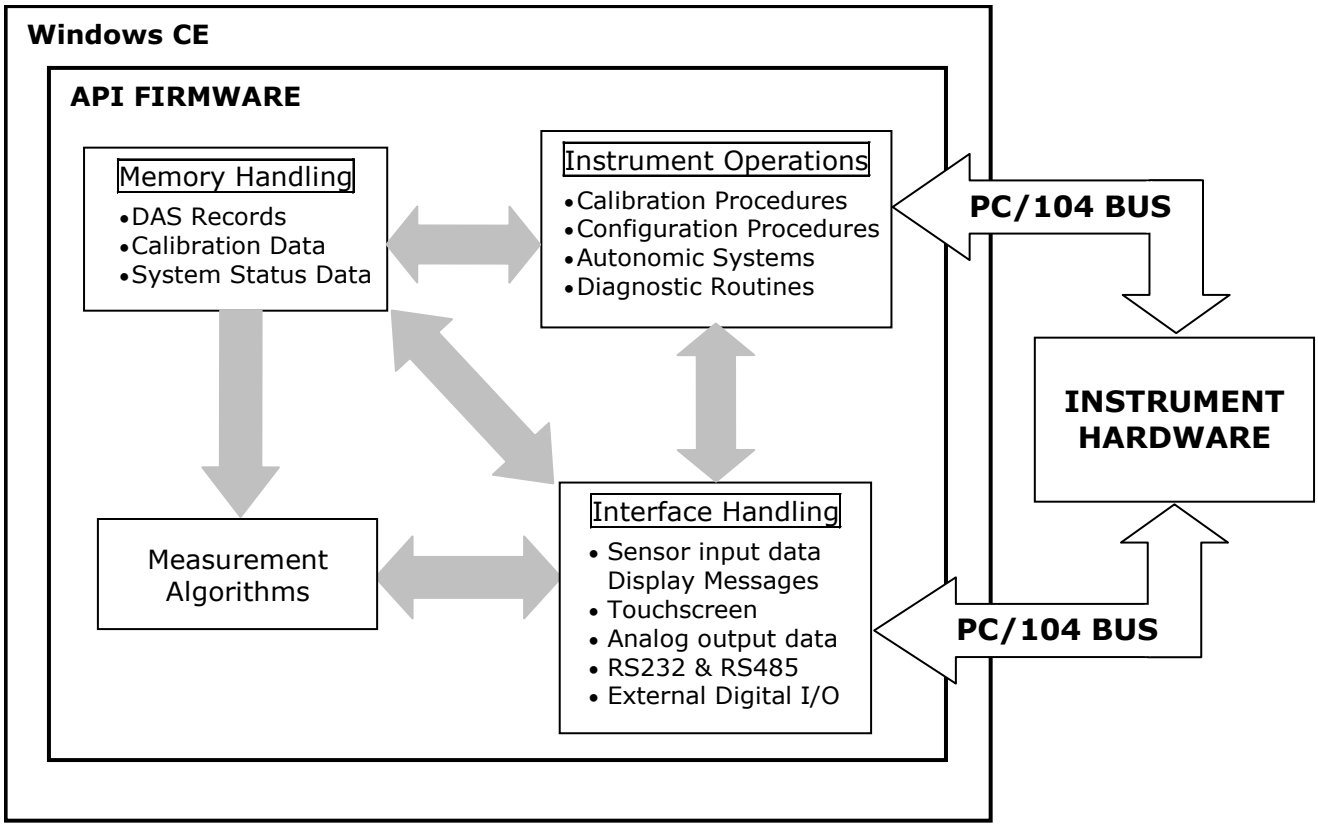

Figure 12-21: Basic Software Operation

12.5.1. ADAPTIVE FILTER

The Model T400 software processes sample gas measurement and reference data through an adaptive filter built into the software. Unlike other analyzers that average the output signal over a fixed time period, the Model T400 averages over a set number of samples, where a new sample is calculated approximately every 3 seconds - this is a technique is known as boxcar averaging. During operation, the software automatically switches between two different length filters, short and long, based on the conditions at hand.

During conditions of constant or nearly constant concentration, the software, by default, computes an average of the last 32 samples (long), or approximately 96 seconds. This provides the calculation portion of the software with smooth, stable readings. If a rapid change in concentration is detected, the filter length is changed to average the last 6 samples (short), approximately 18 seconds of data, to allow the analyzer to respond more quickly. If necessary, these boxcar lengths can be changed between 1 and 1000 samples but with corresponding tradeoffs in rise time and signal-to-noise ratio (contact Technical Support for more information).

Two conditions must be met simultaneously to switch to the short filter. First, the instantaneous concentration must exceed the average in the long filter by a fixed amount. Second, the instantaneous concentration must exceed the average in the long filter by a portion, or percentage, of the average in the long filter.

12.5.2. CALIBRATION - SLOPE AND OFFSET

Calibration of the analyzer is performed exclusively in software. During instrument calibration, (see Section 9) the user enters expected values for zero and span via the front panel touchscreen and commands the instrument to make readings of calibrated sample gases for both levels. The readings taken are adjusted, linearized and compared to the expected values. With this information, the software computes values for instrument slope and offset and stores these values in memory for use in calculating the O_3 concentration of the sample gas.

The instrument slope and offset values recorded during the last calibration can be viewed by pressing the following control button sequence:

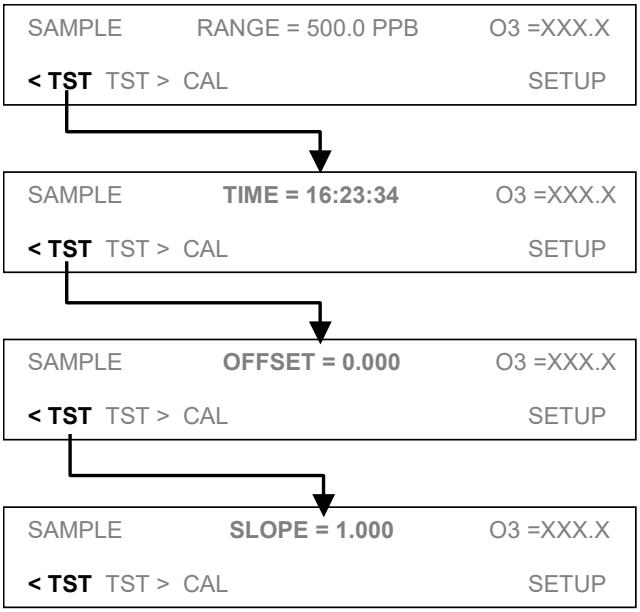

GLOSSARY

Some terms in this glossary may not occur elsewhere in this manual.

Term	Description/Definition
10BaseT	an Ethernet standard that uses twisted ("T") pairs of copper wires to transmit at 10 megabits per second (Mbps)
100BaseT	same as 10BaseT except ten times faster (100 Mbps)
APICOM	name of a remote control program offered by Teledyne API to its customers
ASSY	*Assembly*
CAS	*Code-Activated Switch*
CEM	*Continuous Emission Monitoring*
Chemical formulas that may be included in this document:	
CO_2	carbon dioxide
C_3H_8	propane
CH_4	methane
H_2O	water vapor
HC	general abbreviation for hydrocarbon
HNO_3	nitric acid
H_2S	hydrogen sulfide
NO	nitric oxide
NO_2	nitrogen dioxide
NOX	nitrogen oxides, here defined as the sum of NO and NO_2
NOy	nitrogen oxides, often called odd nitrogen: the sum of NOX plus other compounds such as HNO_3 (definitions vary widely and may include nitrate (NO_3), PAN, N_2O and other compounds as well)
NH_3	ammonia
O_2	molecular oxygen
O_3	ozone
SO_2	sulfur dioxide
cm^3	metric abbreviation for *cubic centimeter* (replaces the obsolete abbreviation "cc")
CPU	*Central Processing Unit*
DAS	*Data Acquisition System*
DCE	*Data Communication Equipment*

Term	Description/Definition
DHCP	*Dynamic Host Configuration Protocol.* A protocol used by LAN or Internet servers to automatically set up the interface protocols between themselves and any other addressable device connected to the network
DIAG	*Diagnostics*, the diagnostic settings of the analyzer.
DOM	*Disk On Module,* a 44-pin IDE flash drive with up to 128MB storage capacity for instrument's firmware, configuration settings and data
DOS	*Disk Operating System*
DRAM	*Dynamic Random Access Memory*
DR-DOS	*Digital Research DOS*
DTE	*Data Terminal Equipment*
EEPROM	*Electrically Erasable Programmable Read-Only Memory* also referred to as a FLASH chip or drive
Ethernet	a standardized (IEEE 802.3) computer networking technology for local area networks (LANs), facilitating communication and sharing resources
Flash	non-volatile, solid-state memory
FPI	*Fabry-Perot Interface*: a special light filter typically made of a transparent plate with two reflecting surfaces or two parallel, highly reflective mirrors
GFC	*Gas Filter Correlation*
I^2C bus	a clocked, bi-directional, serial bus for communication between individual analyzer components
IC	*Integrated Circuit*, a modern, semi-conductor circuit that can contain many basic components such as resistors, transistors, capacitors etc in a miniaturized package used in electronic assemblies
IP	*Internet Protocol*
IZS	*Internal Zero Span*
LAN	*Local Area Network*
LCD	*Liquid Crystal Display*
LED	*Light Emitting Diode*
LPM	*Liters Per Minute*
MFC	*Mass Flow Controller*
M/R	*Measure/Reference*
NDIR	*Non-Dispersive Infrared*
MOLAR MASS	the mass, expressed in grams, of 1 mole of a specific substance. Conversely, one mole is the amount of the substance needed for the molar mass to be the same number in grams as the atomic mass of that substance. EXAMPLE: The atomic weight of Carbon is 12 therefore the molar mass of Carbon is 12 grams. Conversely, one mole of carbon equals the amount of carbon atoms that weighs 12 grams. Atomic weights can be found on any Periodic Table of Elements.
NDIR	*Non-Dispersive Infrared*
NIST-SRM	*National Institute of Standards and Technology - Standard Reference Material*
PC	*Personal Computer*
PCA	P*rinted Circuit Assembly*, the PCB with electronic components, ready to use

Term	Description/Definition
PC/AT	*Personal Computer / Advanced Technology*
PCB	*Printed Circuit Board*, the bare board without electronic component
PFA	*Per-Fluoro-Alkoxy*, an inert polymer; one of the polymers that *Du Pont* markets as *Teflon®*
PLC	*Programmable Logic Controller*, a device that is used to control instruments based on a logic level signal coming from the analyzer
PLD	*Programmable Logic Device*
PLL	*Phase Lock Loop*
PMT	*Photo Multiplier Tube*, a vacuum tube of electrodes that multiply electrons collected and charged to create a detectable current signal
P/N (or PN)	*Part Number*
PSD	*Prevention of Significant Deterioration*
PTFE	*Poly-Tetra-Fluoro-Ethylene*, a very inert polymer material used to handle gases that may react on other surfaces; one of the polymers that *Du Pont* markets as *Teflon®*
PVC	*Poly Vinyl Chloride*, a polymer used for downstream tubing
Rdg	Reading
RS-232	specification and standard describing a serial communication method between DTE (Data Terminal Equipment) and DCE (Data Circuit-terminating Equipment) devices, using a maximum cable-length of 50 feet
RS-485	specification and standard describing a binary serial communication method among multiple devices at a data rate faster than RS-232 with a much longer distance between the host and the furthest device
SAROAD	*Storage and Retrieval of Aerometric Data*
SLAMS	*State and Local Air Monitoring Network Plan*
SLPM	*Standard Liters Per Minute* of a gas at standard temperature and pressure
STP	*Standard Temperature and Pressure*
TCP/IP	*Transfer Control Protocol / Internet Protocol*, the standard communications protocol for Ethernet devices
TEC	*Thermal Electric Cooler*
USB	*Universal Serial Bus*: a standard connection method to establish communication between peripheral devices and a host controller, such as a mouse and/or keyboard and a personal computer or laptop
VARS	*Variables*, the variable settings of the instrument
Z/S	*Zero / Span*

INDEX

1

100 VAC, 213, 247
115 VAC, 213, 247, 250

2

230 VAC, 213, 247

5

50 Hz, 247, 250

6

60 Hz, 213, 249, 250

A

AC Power, 18, 249, 250
  100 VAC, 213, 247
AC Power 115 VAC, 213, 247, 250
AC Power 230 VAC, 213, 247
AC Power 50 Hz, 247, 250
AC Power 60 Hz, 213, 249, 250
AIN, 108
ANALOG CAL WARNING, 52, 72, 133
Analog Inputs, 108
Analog Outputs, 18, 31, 32, 33, 36, 71, 74, 75, 77, 78, 203, 206, 217, 241
  AIN Calibration, 108
  Configuration & Calibration, 75, 94, 96, 97, 98, 101, 103, 104, 105, 108
    Automatic, 25, 74, 97
    Manual-Current Loop, 100, 102
    Manual-Voltage, 98
  CONVERTING VOLTAGE TO CURRENT OUTPUT, 33
  Current Loop, 32
  Electrical Connections, 31
  Electronic Range Selection, 103
  OUTPUT LOOP-BACK, 241
  Over-Range Feature, 104
  Recorder Offset, 105
  Reporting Range, 54, 61, 71, 74
  Test Channel, 106, 206, 217, 241
APICOM, 14, 111, 160
  and DAS, 135, 137, 138, 141, 146, 147, 149, 150, 151, 152
  and Ethernet, 115
  and Failure Prediction, 187
  Interface Example, 161
  Software Download, 152, 161
Approvals, 18
ATIMER, 137, 141, 143
AUTO, 71, 78, 79, 82, 162, 168, 173
AutoCal, 61, 62, 66, 71, 74, 162, 174, 175

B

Beer-Lambert Equation, 14, **229**, 232
BOX TEMP, 52, 71, 72, 106, 133, 201, 203, 206, 211
BOX TEMP WARNING, 52, 72, 133, 201, 206

C

CAL Button, 168
CAL_VALVE, 208
CALDAT, 138
Calibration
  AIN, 108
  Analog Ouputs, 25, 74, 97
  Analog Outputs
    ***Current Loop**, 100, 102*
    Voltage, 98
Calibration Gasses
  Span Gas, 45, 53, 55, 162, 163, 164, 166, 169, 172, 175, 203, 208, 244, 245
  Zero Air, 44, 47, 48, 162, 163, 164, 169, 172, 175, 185, 189, 203, 224
Calibration Mode, 73
CALS Button, 73, 168, 171, 172, 209, 211
CALZ Button, 73, 168, 171, 172, 209, 211
CANNOT DYN SPAN, 52, 72, 201
CANNOT DYN ZERO, 52, 72, 201
CE Mark, 20
Circuit Breaker, 247, 248
CLOCK_ADJ, 87, 89
COMM Ports, 111, 113, 114, 126
  COM1, 110, 128
  COM2, 40, 110, 111, 115, 128
  Communication Modes, 110, 111
  Machine ID, 88
  Machine ID, 43
CONC, 138
CONC Button, 89, 218
CONC_PRECISION, 89

CONC1, 141
Concentration Field, 25
CONFIG INITIALIZED, 52, 72
Control Buttons Definition Field, 25
Control Inputs, 35, 36, 61, 62, 66, 162, 174, 219, 241
  LOW_SPAN_CAL 1, 219
  ZERO_CAL, 219
CPU, 52, 65, 72, 77, 87, 93, 108, 181, 199, 201, 202, 203, 204, 207, 213, 219, 220, 231, 237, 238, 239, 240, 241, 242, 244, 245, 249, 253, 254, 255, 256
  Analog to Digital Converter, 52, 72, 93, 218, 240, 241, 252
  Status LED's, 207
Critical flow orifice, 235
Current Loop Outputs, 31, 32, 33, 100, 101, 102
  CONVERTING FROM VOLTAGE OUTPUT, 33
  Manual Calibration, 100

D

DAS System, 25, 52, 67, 71, 72, 74, 77, 86, 201, 229
  and APICOM, 152
  Channels
    CALDAT, 138
    CONC, 138
    O3GEN, 138
    O3REF, 138
    PNUMTC, 138
  HOLD OFF, 89, 137, 150
  Parameters, 144
    CONC1, 141
    STABIL, 133, 187, 201, 203
  Triggering Events, 143
    ATIMER, 137, 141, 143
    EXITZR, 143
    SLPCHG, 143
DAS_HOLD_OFF, 89
data acquisition. *See* DAS
DATA INITIALIZED, 52, 72
DB-25M, 16
DB-9F, 16
DC Power, 34, 36, 213, 214, 247
DC Power Test Points, 213, 214
Default Settings
  DAS, 137, 138, 139
  Ethernet, 120
  Hessen Protocol, 129, 133
  VARS, 89
DHCP, 119
DIAG AIO, 91
DIAG AOUT, 91
DIAG ELEC, 91
DIAG FCAL, 91
DIAG I/O, 91
DIAG OPTIC, 91
DIAG TCHN, 91
Diagnostic Menu (DIAG), 75, 84, 85, **91**, 217
  03 GENERATOR CALIBRATION, 91
  Accessing, 92
  AIN CALIBRATED, 93, 108
  ANALOG I/O
    AOUT CALIBRATED CONFIGURATION, 93, 96
    CONC_OUT_1, 93
    CONC_OUT_2, 93
  ANALOG I/O CONFIGURATION, 91, 94, 96, 97, 98, 101, 103, 104, 105, 108
  ANALOG OUTPUT (Step Test), 91, 217
  DARK CALIBRATION, 91, 178
  FLOW CALIBRATION, 91
  SIGNAL I/O, 91, 204, 205, 207, 211, 212, 215, 218, 219
  TEST CHAN OUPTUT, 91
  TEST OUTPUT, 93, 241
Display Precision, 89
DUAL, 78, 79, 81, 162, 168, 173

E

EC Compliance, 20
EEPROM
  Disk on Module, 146
Electrical Connections
  AC Power, 30, 249
  Analog Outputs, 31, 32, 78
    CURRENT LOOP, 33, 100
    Voltage Ranges, 98
  Control Inputs, 36, 219
  Ethernet, 14, 75, 115
  Modem, 157, 220
Electro-Static Discharge, 21, 41, 226
ENTR Button, 69, 75, 147, 164, 178, 183, 221
Environmental Protection Agency(EPA), 18, 163
  Calibration, 45, 62
    NIST Traceability, 164, 172, 175
  EPA Equivalency, 20
Ethernet, 14, 67, 115, 119, 153
  Configuration, **115**–**22**
    Property Defaults, 120
    using DHCP, 119
  DHCP, 119
  HOSTNAME, 122
Exhaust Gas, 28
Exhaust Gas Outlet, 28
EXIT Button, 75, 221
EXITZR, 143
External Pump, 15

F

Final Test and Validation Data Sheet, 22, 53, 187
Flash Chip, 239
Flow Diagram
  Basic, 45, 234
  IZS, 46
  Reference/Measurement Cycle, 232
  Z/S, 62
Front Panel, 23, 192, 256
  Buttonpad, 162
  Concentration Field, 25
  Display, 91, 106, 201, 229
  Message Field, 25

Mode Field, 25
ON/OFF Switch, 247
Status LED's, 136
Status LEDs, 25
Touchscreen Definition Field, 25

G

Gas Inlets, 201, 245
Sample, 28
Span, 28
ZERO AIR, 28
Gas Outlets, 30, 47, 48, 49, 50, 53, 64, 209, 236, 252
Exhaust, 28

H

Hessen Protocol, 111, 125, 126, 127, 128, 129, 130, 131, 132, 133, 134
Default Settings, 129
Status Bits
Default Settings, 133
HOSTNAME, 122

I

I^2C, 207, 212, 214, 222, 238, 241, 242, 253, 254
Status LED, 207
Interferents, 233
Internal Zero Air (IZS), 28
Internal Zero/Span Option (IZS), 15, 19, 241
AC Power, 247
AutoCal, 175
Calibration, 53, 60, 162, 170, 181
DIAG Functions, 91
Flow Diagram, 46, 65
Generator, 19, 58, 59, 65, 71, 89, 162, 181, 197, 203, 208, 212, 222, 224, 244
Interferents, 53
Maintenance, 185, 189, 191, 197
O_3 Scrubber, 52, 60, 72, 185, 224, 233
Pneumatic Setup, 48
Span Gas for, 45
Specifications, 19
Test Channel Functions, 106
Test Functions, 71
Troubleshooting, 187, 202, 206, 208, 209, 211, 212, 215, 219, 222, 223, 224
Valve Control, 245
Valve States, 66
Warning Messages, 52, 72, 133
IZS, 44
Reference Feedback Option, 19

L

LAMP DRIVER WARN, 52, 72
LAMP STABIL WARN, 52, 72, 133, 201
Local Area Network (LAN), 119, 120
LOW_SPAN_CAL 1, 219

M

Machine ID, 43, 88
Measure/Reference Valve, 232
Measurement / Reference Cycle, 206, 232
Menu Buttons
CAL, 168
CALS, 73, 168, 171, 172, 209, 211
CALZ, 73, 168, 171, 172, 209, 211
CONC, 89, 218
ENTR, 69, 75, 147, 164, 178, 183, 221
EXIT, 75, 221
MENUS
AUTO, 71, 78, 79, 82, 162, 168, 173
DUAL, 78, 79, 81, 162, 168, 173
SNGL, 54, 61, 78, 79, 80
Message Field, 25
Metal Wool Scrubber, 71, 89, 106, 206, 208, 224, 243, 244, 247, 251
AC Power, 251
Troubleshooting, 211, 215, 224
microcomputer, 237, 256
Mode Field, 25
Modem, 157, 220
Motherboard, 52, 72, 93, 100, 201, 202, 207, 211, 213, 217, 237, 238, 240, 249
Multidrop, 111

O

O_3 Detector Output, 240
O_3 DRIVE[1], 71, 187
O3 GEN LAMP WARN, 52, 72
O3 GEN TEMP, 203
O3 GEN TEMP WARN, 52, 72, 202
O_3 GEN TMP[1], 71
O_3 GEN[2], 71
O_3 Generator IZS, 58, 59, 65, 71, 89, 162, 181, 197, 203, 208, 212, 222, 224, 244
O_3 MEAS, 71, 203
O_3 Option
Relay PCA
Status LED's, 208
O_3 REF, 71, 187, 203, 221
O3 SCRUB TEMP WARN, 52, 72, 133
O_3 SCRUB[3], 71
O_3 Scrubber, 52, 60, 72, 185, 224, 233
O3_GEN_HEATER, 208, 212
O3_GEN_LAMP, 89
O3_GEN_LOW1, 89
O3_GEN_LOW2, 89
O3_SCRUB_HEATER, 208
O3_SCRUB_SET, 89
O3GEN, 138
O3REF, 138
Offset, 71, 100, 105, 187, 201, 258
OFFSET, 71, 164, 183, 187, 203, 258
ON/OFF Switch, 213, 247, 248
Operating Modes, 91, 187
Calibration Mode, 73, 133

Diagnostic Mode (DIAG), 91
Sample Mode, 25
SAMPLE mode, 67, 69, 89, 174, 209, 245
Secondary Setup, 75
Setup, 74

P

Particulate Filter, 185, 188, 201, 236
PHOTO LAMP, 71, 106, 203, 206, 255
PHOTO REF WARNING, 52, 72, 133, 201
PHOTO TEMP WARNING, 52, 72, 133, 201, 206
PHOTO_LAMP, 89, 208, 212, 218
PHOTO_LAMP_HEATER, 208
PHOTO_REF_VALVE, 208
PHOTOMETER, 193, 247, 252
Absorption Tube, 185, 193, 229, 238
CALIBRATION, 162, 178
Gas Flow, 180
Electronics, 253
Gas Pressure, 255
Layout, 252
Sensor
Flow, 216
PRessure, 216
Status LED's, 244
Temperature, 255
Theory of Operation, 253
UV Absorption Path, 230, 231, 232
UV detector, 194, 196, 201, 252
UV Lamp, 208, 221, 238, 245, 254
PNUMTC, 138
PRES, 71, 187, 190, 201, 203, 255
Pump
Sample, 71, 189, 201, 210, 213, 244, 250

R

RANGE, 71, 79, 93, 130, 203
RANGE1, 71, 81, 82, 130
RANGE2, 71, 81, 82, 130
REAR BOARD NOT DET, 52, 72, 201
Recorder Offset, 105
REF_4096_MV, 218
REF_GND, 218
Reference Feedback Option (IZS), 19
RELAY BOARD WARN, 52, 72
Relay PCA, **242**–**47**
DC Power Test Points, 214
Status LED's, 207, 208, 244, 249
CAL_VALVE, 208
O3_GEN_HEATER, 208, 212
O3_SCRUB_HEATER, 208
PHOTO_LAMP_HEATER, 208
PHOTO_REF_VALVE, 208
Troubleshooting, 206, 207, 208, 213, 214, **215**
Reporting Range, 54, 61, 74, 77
Configuration, 74
RJ45, 16
RS-232, 14, 39, 40, 44, 61, 62, 65, 66, 67, 75, 115, 136, 137, 149, 150, 153, 156, 160, 240
Troubleshooting, 220
RS-485, 14, 44, 67, 110, 111, 115, 240

S

Safety Messages
Electric Shock, 21, 30, 183, 213, 221, 243
General, 21, 29, 30, 44, 64, 100, 190, 193, 194, 196, 198, 252
SAMP FL, 71, 187, 190
SAMPL_FL, 255
Sample Flow Sensor, 71, 201, 236, 240
SAMPLE FLOW WARN, 52, 72, 201, 209
Sample Inlet, 28
Sample Mode, 25
SAMPLE mode, 67, 69, 89, 174, 209, 245
SAMPLE PRESS WARN, 52, 72, 133
Sample Pressure Sensor, 201, 203, 236
SAMPLE TEMP, 52, 71, 72, 106, 133, 203, 206, 255
SAMPLE TEMP WARN, 52, 72, 133, 201
Sample Temperature Sensor, 201
SAMPLE/CAL valve, 245
SAMPLE_FLOW, 218
Sensors
O_3 Detector Output, 240
Sample Flow, 71, 201, 236, 240
Sample Pressure, 201, 203, 236
Sample Temperature, 201
Thermistors, 212, 240
Sample Temperature, 201
Thermocouple Inputs, 246
Serial I/O Ports, 18, 61, 62, 65, 66, 200, 201, 238
Modem, 157, 220
Multidrop, 111
RS-232, 14, 40, 61, 62, 65, 66, 67, 75, 136, 137, 149, 150, 160, 240
Troubleshooting, 220
RS-485, 14, 67, 111, 240
Setup MODE, 74
Signal I/O
PHOTO_LAMP, 218
REF_4096_MV, 218
REF_GND, 218
SAMPLE_FLOW, 218
Slope, 71, 187, 201, 258
SLOPE, 71, 164, 183, 187, 203, 258
SLPCHG, 143
SNGL, 54, 61, 78, 79, 80
Span Gas, 28, 45, 53, 55, 162, 163, 164, 166, 169, 172, 175, 203, 208, 244, 245
Span Inlet, 28
Specifications, 18, 19, 20
EC Compliance, 20
STABIL, 52, 71, 133, 187, 201, 203
Standard Temperature and Pressure, 83, 229
Status LED's
CPU, 207
I^2C, 207
Relay PCA, 207, 244, 249
CAL_VALVE, 208
O_3 Option, 208

O3_GEN_HEATER, 208, 212
O3_SCRUB_HEATER, 208
PHOTO_LAMP_HEATER, 208
PHOTO_REF_VALVE, 208
Watchdog, 207, 214, 244
Status Outputs, 34, 218, 241
ST_CONC_VALID, 218
ST_DIAG, 218
ST_FLOW_ALARM, 218
ST_HIGH_RANGE, 218
ST_PRESS_ALARM, 218
ST_SPAN_CAL, 218, 219
ST_SYSTEM_OK, 218
ST_ZERO_CAL, 218
System
Default Settings, 137, 138, 139
SYSTEM RESET, 52, 72, 133, 202

T

Teledyne Contact Information
Email Address, **228**
Fax, **228**
Phone, **228**
Technical Assistance, **228**
Website, **228**
Manuals, 125, 128
Software Downloads, 152, 161
Terminal Mode, 154
Command Syntax, 155
Computer mode, 111, 153
Interactive mode, 153
Test Channel, 106, 206, 217
Test Functions, 53, 69, 70, 71, 106, 185, 187, 194, 202, 203, 209, 217
BOX TEMP, 52, 71, 72, 106, 133, 201, 203, 206, 211
O_3 DRIVE[1], 71, 187
O3 GEN TEMP, 203
O_3 GEN TMP[1], 71
O_3 GEN[2], 71
O_3 MEAS, 71, 203
O_3 REF, 71, 187, 194, 203, 221
O_3 SCRUB[3], 71
OFFSET, 71, 164, 183, 187, 203, 258
PHOTO LAMP, 71, 106, 203, 206, 255
PRES, 71, 187, 190, 201, 203, 255
RANGE, 71, 79, 81, 82, 93, 130, 203
RANGE1, 71, 81, 82, 130
RANGE2, 71, 81, 82, 130
SAMP FL, 71, 187, 190
SAMPL_FL, 255
SAMPLE TEMP, 52, 71, 72, 106, 133, 203, 206, 255
SLOPE, 71, 164, 183, 187, 203, 258
STABIL, 52, 71, 72, 133, 187, 201, 203
TEST[4], 71
TIME, 71, 175, 203
TEST[4], 71
Theory of Operation
Beer-Lambert Equation, 14, 229, 232
Thermistors, 212, 240
Thermocouple Inputs, 246
TIME, 71, 175, 203

U

Ultraviolet Light, 14, 230, 231, 232, 233, 252, 253
Units of Measurement, 54, 61
UV, 221
UV Absorption Path, 230, 231, 232
UV detector, 194, 196, 201, 252
UV Lamp, 221
UV Light, 221
UV Source, 245
O3Generator, 197, 212, 222
Status LED's, 208
Photometer, 221, 238, 244, 245, 252, 254
Adjustment, 194, 196
Calibration, 178
Power Supply, 247
Replacement, 196
Status LED's, 208
Troubleshooting, 201, 203, 211, 212

V

Valve Options, 28, 53, 61, 162, 169, 171
Heater Control, 245
Internal Zero/Span Option (IZS), 15, 19, 71, 241
AC Power, 247, 251
AutoCal, 175
Calibration, 53, 60, 162, 170, 181
DIAG Functions, 91
Flow Diagram, 46, 65
Generator, 58, 59, 65, 71, 89, 162, 181, 197, 203, 208, 212, 222, 224, 244
Interferents, 53
Maintenance, 185, 189, 191, 197
O_3 Scrubber, 52, 60, 72, 185, 224, 233
Pneumatic Setup, 48
Span Gas for, 45
Specifications, 19
Test Channel Functions, 106
Test Functions, 71
Troubleshooting, 187, 202, 206, 208, 209, 211, 212, 215, 219, 222, 223, 224
Valve Control, 245
Valve States, 66
VARS, 89
Warning Messages, 52, 72, 133
Status LED's, 244
Zero/Span, **61**
***AND AUTOCAL**, 162, 174*
Calibration, 53, 169, 172, 173
Flow Diagram, 62
Setup, 63
Troubleshooting, 208, 219
Valve States, 62
with Remote Contact Closure, 174
VARS Menu, 75, 84, 85, 87, 89, 90, 137, 150
Variable Default Values, 89
Variable Names
CLOCK_ADJ, 89
CONC_PRECISION, 89
O3_GEN_LAMP, 89
O3_GEN_LOW1, 89
O3_GEN_LOW2, 89
O3_SCRUB_SET, 89

PHOTO_LAMP, 89, 208, 212
VARS_HOLD_OFF, 89
Ventilation Clearance, 22

W

Warning Messages, 51, 52, 72, 199, 201
ANALOG CAL WARNING, 52, 72, 133
BOX TEMP WARNING, 52, 72, 133, 201, 206
CANNOT DYN SPAN, 52, 72, 201
CANNOT DYN ZERO, 52, 72, 201
CONFIG INITIALIZED, 52, 72
DATA INITIALIZED, 52, 72
LAMP DRIVER WARN, 52, 72
LAMP STABIL WARN, 52, 72, 133, 201
O3 GEN LAMP WARN, 52, 72
O3 GEN TEMP WARN, 52, 72, 202
O3 SCRUB TEMP WARN, 52, 72, 133
PHOTO REF WARNING, 52, 72, 133, 201
PHOTO TEMP WARNING, 52, 72, 133, 201, 206
REAR BOARD NOT DET, 52, 72, 201
RELAY BOARD WARN, 52, 72
SAMPLE FLOW WARN, 52, 72, 201, 209
SAMPLE PRESS WARN, 52, 72, 133
SAMPLE TEMP WARN, 52, 72, 133, 201
SYSTEM RESET, 52, 72, 133, 202
Watchdog Circuit, 207, 244
Status LED, 207, 214, 244

Z

Zero Air, 44, 47, 48, 162, 163, 164, 169, 172, 175, 185, 189, 203, 224
ZERO AIR Inlet, 28
ZERO/SPAN valve, 174, 245
ZERO_CAL, 219

APPENDIX A – Software Version-Specific Documentation

APPENDIX A-1: Software Menu Trees

APPENDIX A-2: Setup Variables Available Via Serial I/O

APPENDIX A-3: Warnings and Test Measurements Via Serial I/O

APPENDIX A-4: Signal I/O Definitions

APPENDIX A-5: DAS Functions

APPENDIX A-6: MODBUS Register Map

APPENDIX A-1: T400 and M400E Software Menu Trees

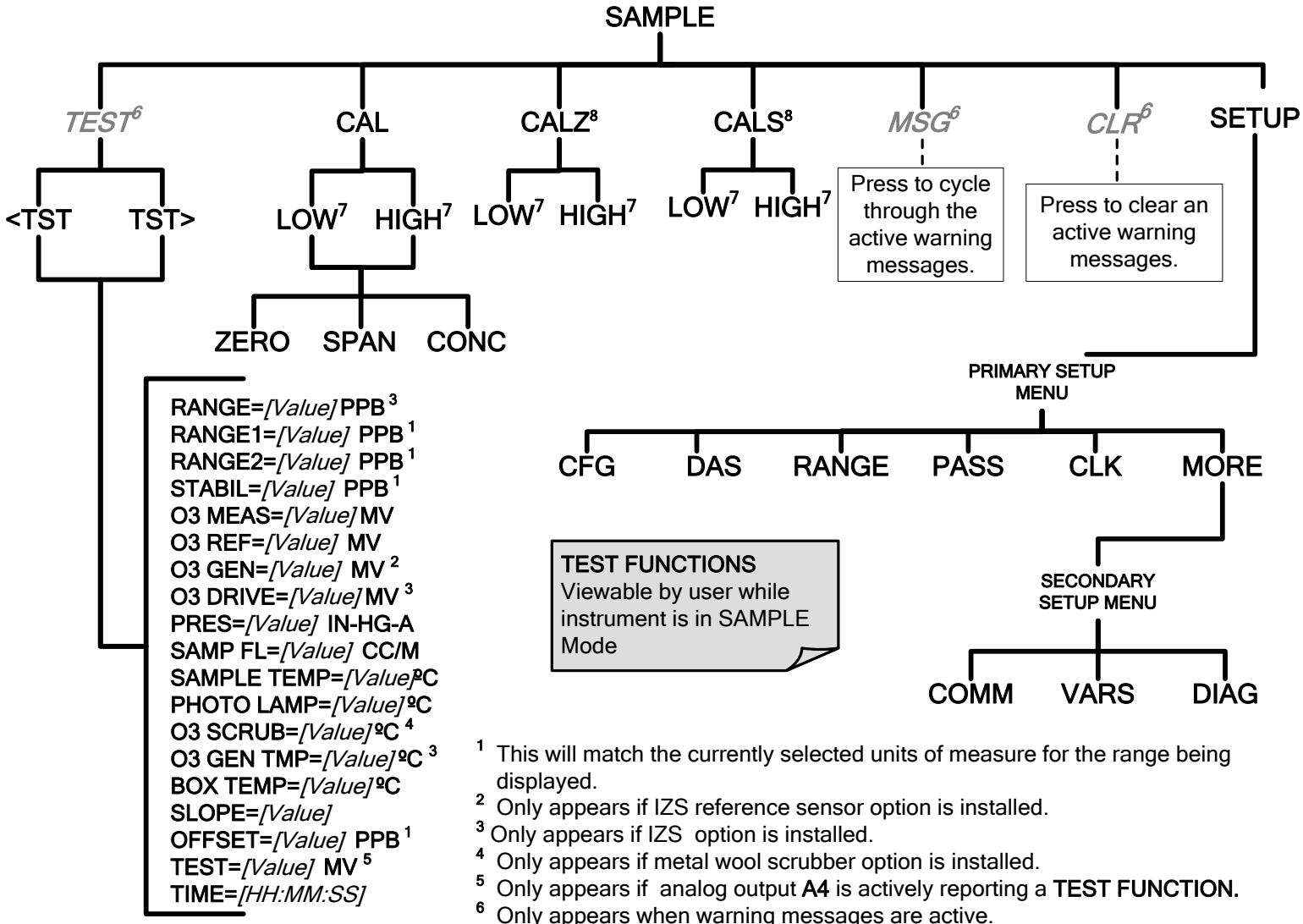

[1] This will match the currently selected units of measure for the range being displayed.
[2] Only appears if IZS reference sensor option is installed.
[3] Only appears if IZS option is installed.
[4] Only appears if metal wool scrubber option is installed.
[5] Only appears if analog output A4 is actively reporting a TEST FUNCTION.
[6] Only appears when warning messages are active.
[7] Only appears when reporting ranges are set for either DUAL or AUTO modes.
[8] Only appears when the optional metal wool scrubber is installed.

Figure A-1: Basic Sample Display Menu without Options

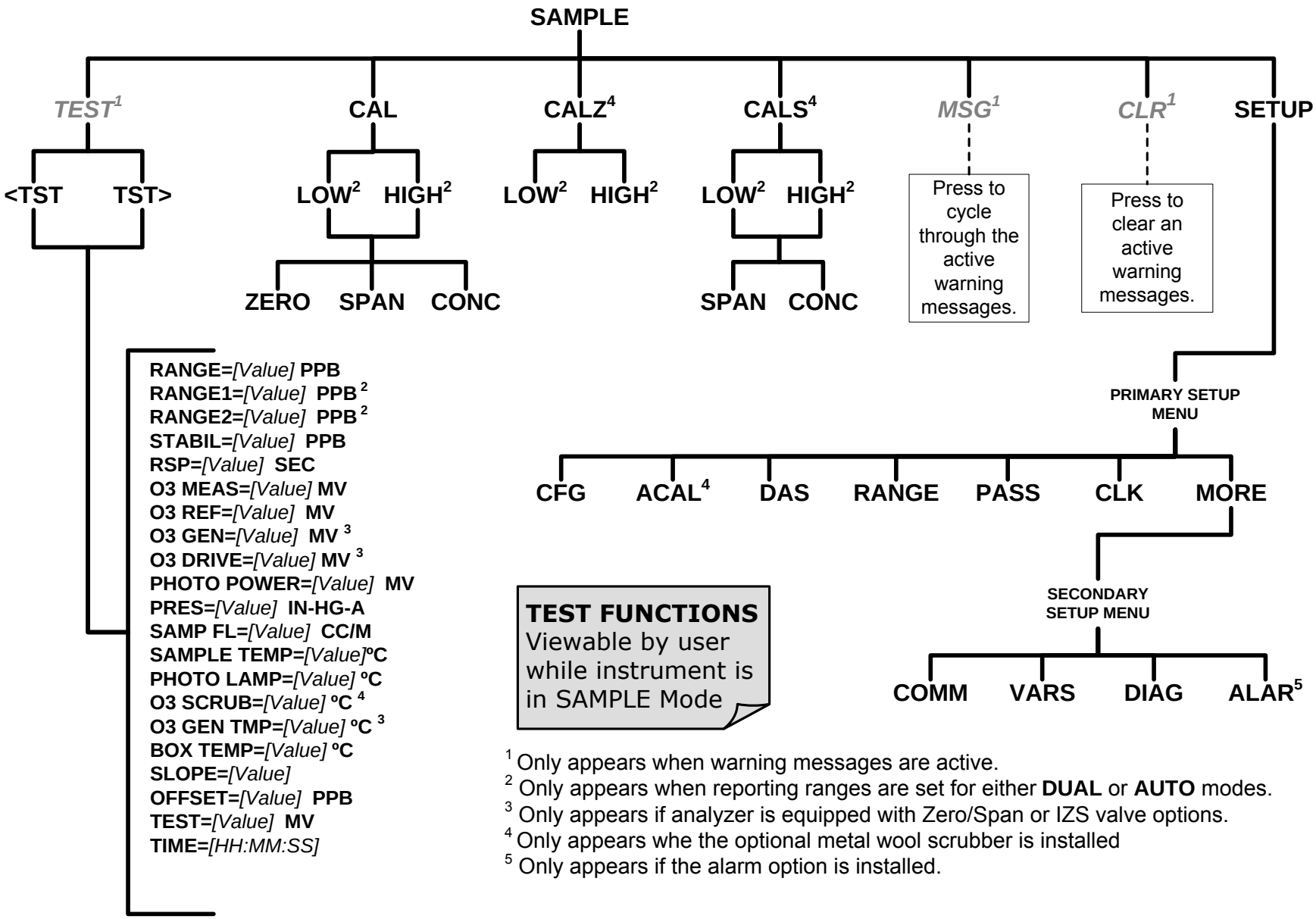

[1] Only appears when warning messages are active.
[2] Only appears when reporting ranges are set for either **DUAL** or **AUTO** modes.
[3] Only appears if analyzer is equipped with Zero/Span or IZS valve options.
[4] Only appears whe the optional metal wool scrubber is installed
[5] Only appears if the alarm option is installed.

Figure A-1: Basic Sample Display Menu with Options

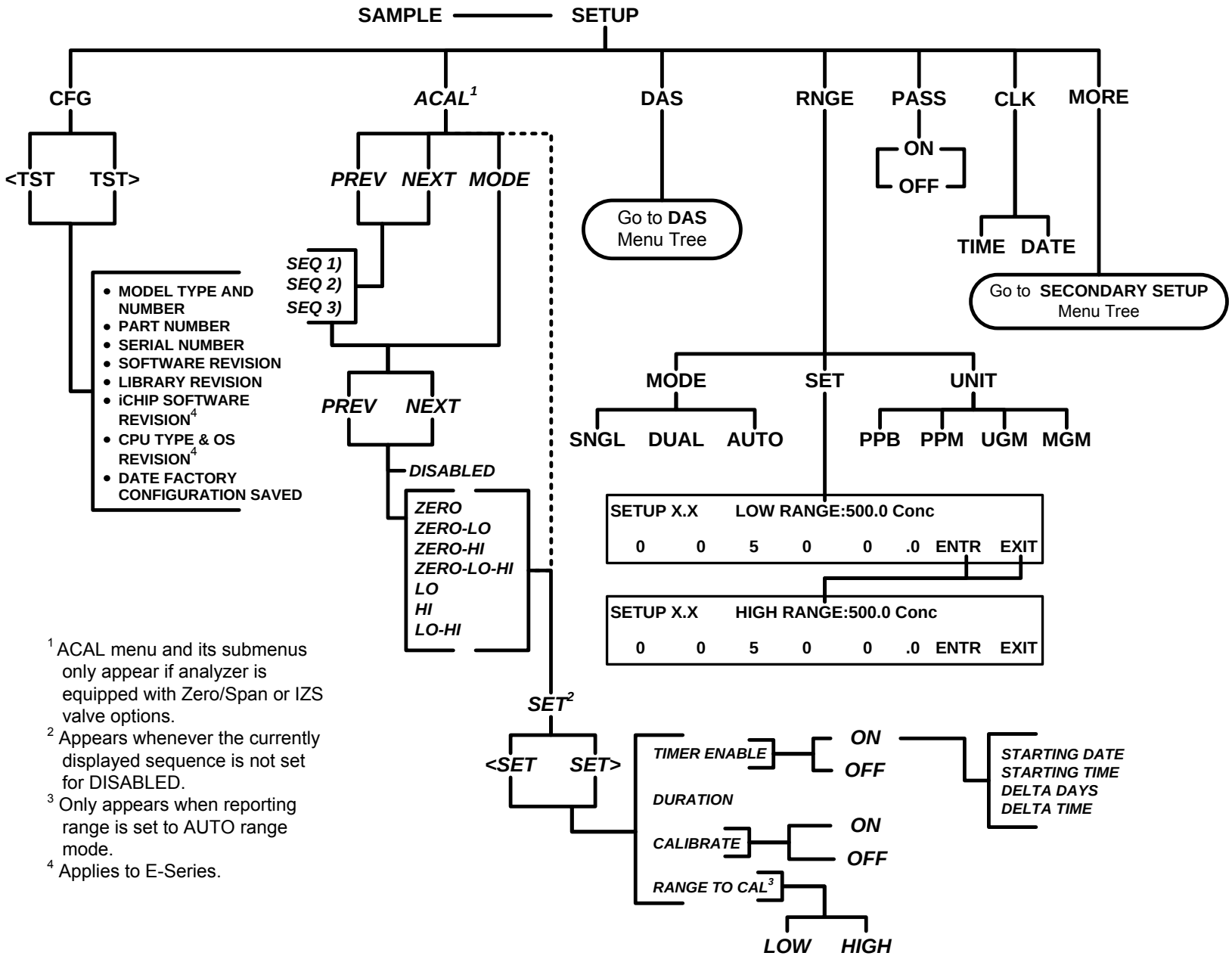

[1] ACAL menu and its submenus only appear if analyzer is equipped with Zero/Span or IZS valve options.
[2] Appears whenever the currently displayed sequence is not set for DISABLED.
[3] Only appears when reporting range is set to AUTO range mode.
[4] Applies to E-Series.

Figure A-2: Primary Setup Menu (Except DAS)

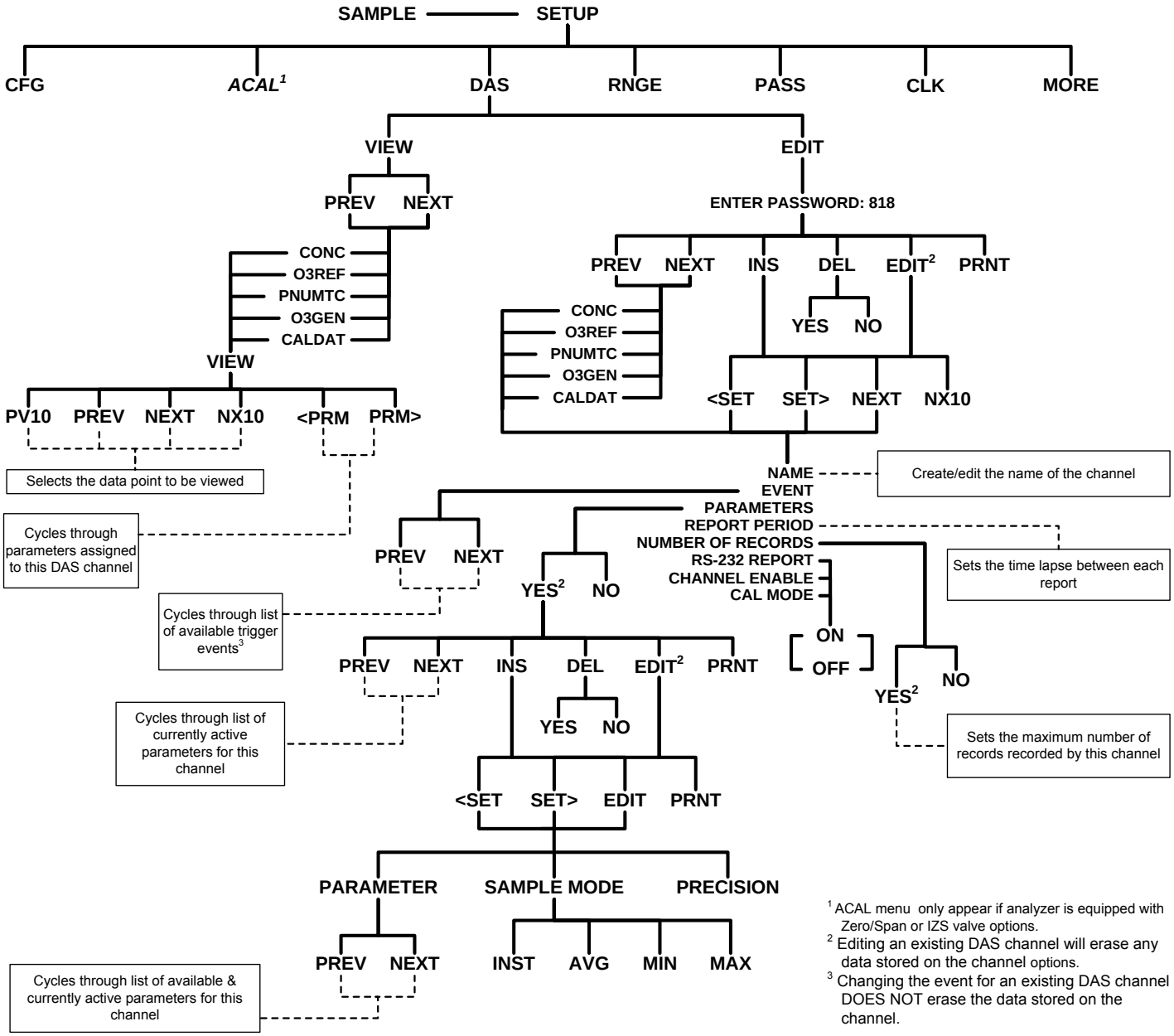

Figure A-3: Primary Setup Menu (DAS)

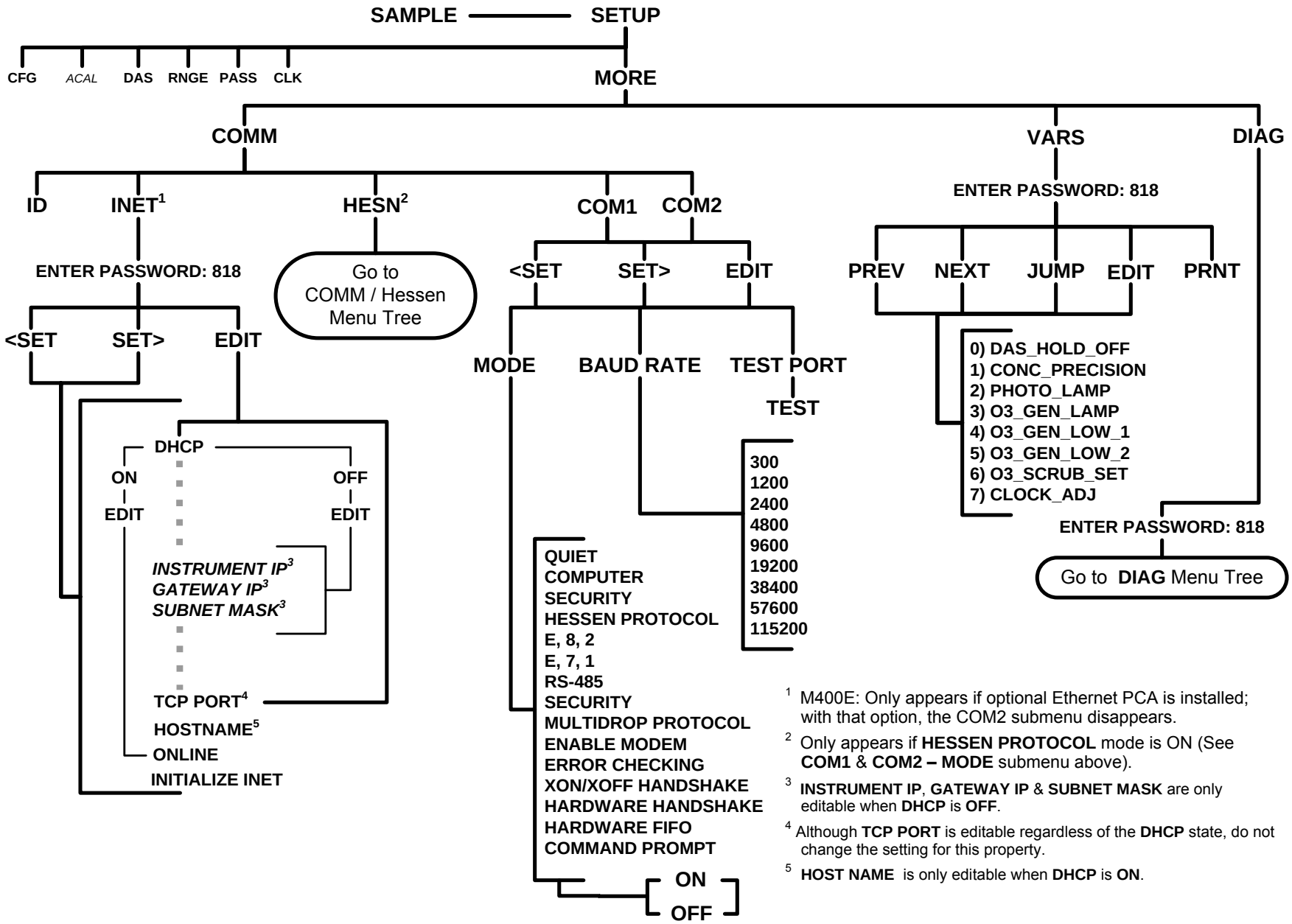

Figure A-4: Secondary Setup Menu (COMM & VARS)

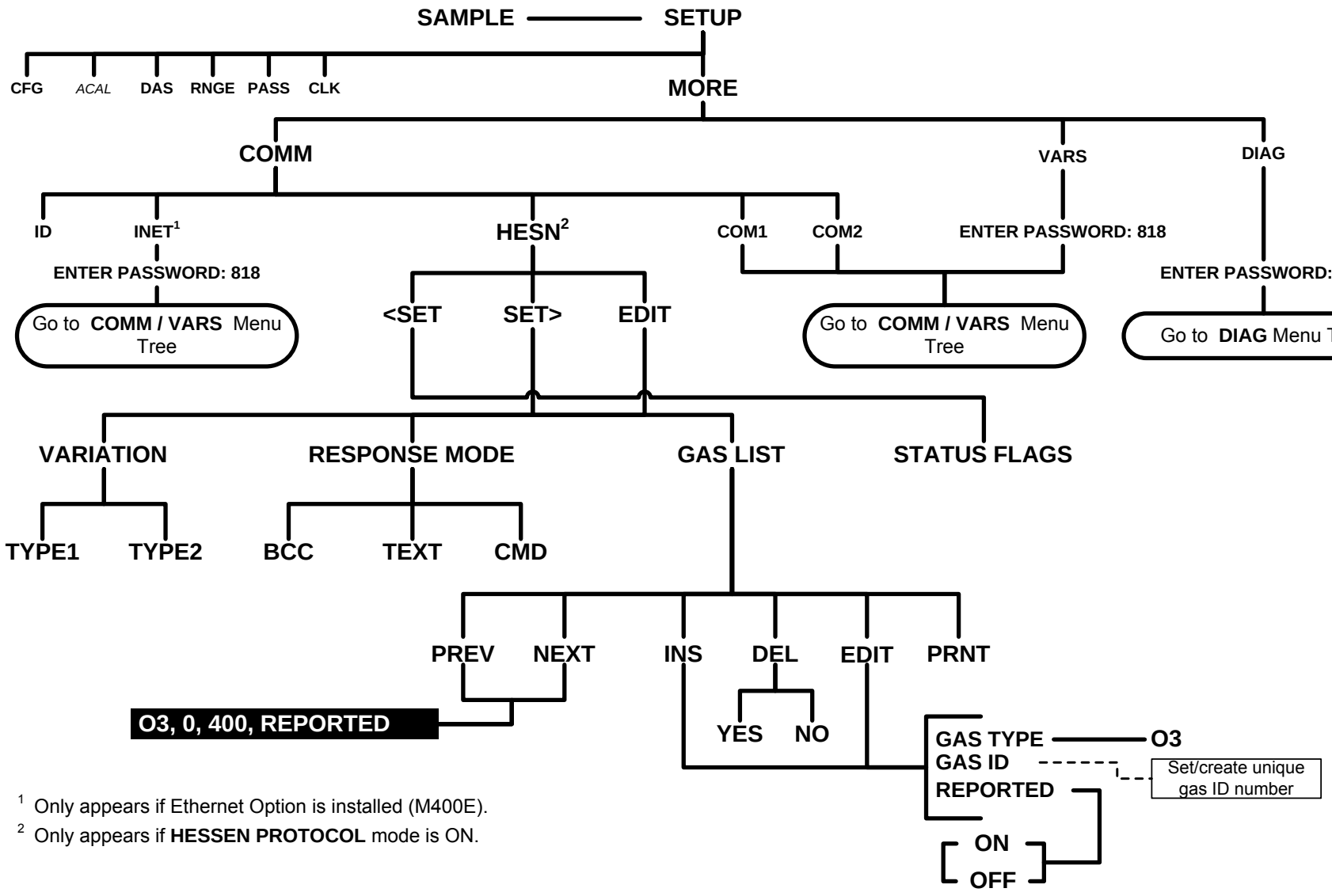

Figure A-5: Secondary Setup Menu (HESSEN)

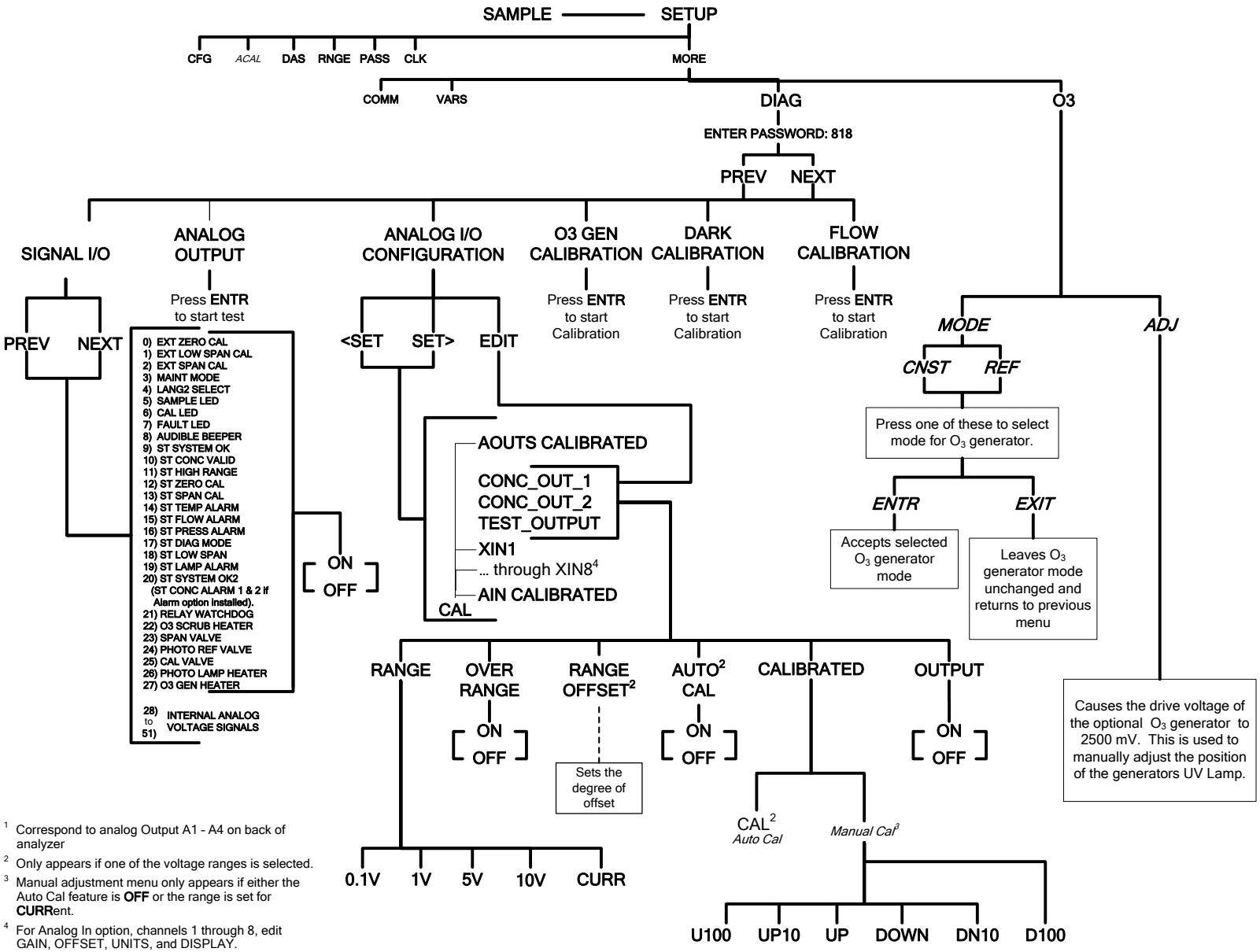

[1] Correspond to analog Output A1 - A4 on back of analyzer

[2] Only appears if one of the voltage ranges is selected.

[3] Manual adjustment menu only appears if either the Auto Cal feature is **OFF** or the range is set for **CURR**ent.

[4] For Analog In option, channels 1 through 8, edit GAIN, OFFSET, UNITS, and DISPLAY.

Figure A-6: Secondary Setup Menu (DIAG & O_3)

APPENDIX A-2: Setup Variables, Rev 1.0.4/E.5

Table A-1: T400 and M400E Setup Variables

SETUP VARIABLE	NUMERIC UNITS	DEFAULT VALUE	VALUE RANGE	DESCRIPTION
Low Access Level Setup Variables (818 password)				
DAS_HOLD_OFF	Minutes	15	0.5–20	Duration of DAS hold-off period.
CONC_PRECISION	—	AUTO	AUTO, 0, 1, 2, 3, 4	Number of digits to display to the right of the decimal point for concentrations on the display. Enclose value in double quotes (") when setting from the RS-232 interface.
PHOTO_LAMP	ºC	58 **Warnings: 57–67**	0–100	Photometer lamp temperature set point and warning limits.
O3_GEN_LAMP	ºC	48 **Warnings: 43–53**	0–100	O_3 generator lamp temperature set point and warning limits.
O3_GEN_LOW1	PPB	100	0–1500	O_3 generator low set point for range #1.
O3_GEN_LOW2	PPB	100	0–1500	O_3 generator low set point for range #2.
O3_SCRUB_SET	ºC	110 **Warnings: 100–120**	0–200	O_3 scrubber temperature set point and warning limits.
CLOCK_ADJ	Sec./Day	0	-60–60	Time-of-day clock speed adjustment.
SERVICE_CLEAR	—	OFF	ON, OFF	ON restarts the timer since last service. (The ON reverts to OFF once the ENTR button is pressed).

APPENDIX A-3: Warnings and Test Functions, Rev 1.0.0/E.3

Table A-2: T400 and M400E Warning Messages

NAME	MESSAGE TEXT	DESCRIPTION	REAL TIME
WSYSRES	**SYSTEM RESET**	Instrument was power-cycled or the CPU was reset.	Yes [1]
WDATAINIT	**DATA INITIALIZED**	Data storage was erased.	No
WCONFIGINIT	**CONFIG INITIALIZED**	Configuration storage was reset to factory configuration or erased.	No
WO3ALARM1 [4]	**O3 ALARM 1 WARN**	O_3 concentration alarm limit #1 exceeded	Yes
WO3ALARM2 [4]	**O3 ALARM 2 WARN**	O3 concentration alarm limit #2 exceeded	Yes
WPHOTOREF	**PHOTO REF WARNING**	Photometer reference reading less than 2500 mV or greater than 4999 mV.	Yes
WLAMPSTABIL	**LAMP STABIL WARN**	Photometer lamp reference step changes occur more than 25% of the time.	Yes
WO3GENREF	**O3 GEN REF WARNING**	O_3 reference detector drops below 50 mV during reference feedback O_3 generator control.	Yes
WO3GENINT	**O3 GEN LAMP WARN**	O_3 concentration below 1000 PPB when O_3 lamp drive is above 4500 mV during O_3 generator calibration.	Yes
WSAMPPRESS	**SAMPLE PRESS WARN**	Sample pressure outside of warning limits specified by *SAMP_PRESS_SET* variable.	Yes
WSAMPFLOW	**SAMPLE FLOW WARN**	Sample flow outside of warning limits specified by *SAMP_FLOW_SET* variable.	Yes
WSAMPTEMP	**SAMPLE TEMP WARN**	Sample temperature outside of warning limits specified by *SAMP_TEMP_SET* variable.	Yes
WBOXTEMP	**BOX TEMP WARNING**	Chassis temperature outside of warning limits specified by *BOX_SET* variable.	Yes
WO3GENTEMP	**O3 GEN TEMP WARN**	O_3 generator lamp temperature outside of warning limits specified by *O3_GEN_LAMP* variable.	Yes
WO3SCRUBTEMP	**O3 SCRUB TEMP WARN**	O_3 scrubber temperature outside of warning limits specified by *O3_SCRUB_SET* variable.	Yes
WPHOTOLTEMP	**PHOTO TEMP WARNING**	Photometer lamp temperature outside of warning limits specified by *PHOTO_LAMP* variable.	Yes
WDYNZERO	**CANNOT DYN ZERO**	Contact closure zero calibration failed while *DYN_ZERO* was set to *ON*.	Yes [2]
WDYNSPAN	**CANNOT DYN SPAN**	Contact closure span calibration failed while *DYN_SPAN* was set to *ON*.	Yes [3]
WREARBOARD	**REAR BOARD NOT DET**	Rear board was not detected during power up.	Yes
WRELAYBOARD	**RELAY BOARD WARN**	Firmware is unable to communicate with the relay board.	Yes
WLAMPDRIVER	**LAMP DRIVER WARN**	Firmware is unable to communicate with either the O_3 generator or photometer lamp I^2C driver chip.	Yes
WFRONTPANEL [5]	**FRONT PANEL WARN**	Firmware is unable to communicate with the front panel.	Yes
WANALOGCAL	**ANALOG CAL WARNING**	The A/D or at least one D/A channel has not been calibrated.	Yes

[1] Cleared 45 minutes after power up.

[2] Cleared the next time successful zero calibration is performed.

[3] Cleared the next time successful span calibration is performed.

[4] Concentration alarm option.

[5] Applies to E-Series.

Table A-3: T400 and M400E Test Functions

NAME [1]	MESSAGE TEXT	DESCRIPTION
RANGE	**RANGE=500.0 PPB [3]**	D/A range in single or auto-range modes.
RANGE1	**RANGE1=500.0 PPB [3]**	D/A #1 range in dual range mode.
RANGE2	**RANGE2=500.0 PPB [3]**	D/A #2 range in dual range mode.
STABILITY	**STABIL=0.0 PPB [3]**	Concentration stability (standard deviation based on setting of *STABIL_FREQ* and *STABIL_SAMPLES*).
RESPONSE [2]	**RSP=3.11(0.00) SEC**	Instrument response. How frequently concentration is updated. Time in parenthesis is standard deviation.
PHOTOMEAS	**O3 MEAS=2993.8 MV**	Photometer detector measure reading.
PHOTOREF	**O3 REF=3000.0 MV**	Photometer detector reference reading.
O3GENREF	**O3 GEN=4250.0 MV**	O_3 generator reference detector reading.
O3GENDRIVE	**O3 DRIVE=0.0 MV**	O_3 generator lamp drive output.
PHOTOPOWER	**PHOTO POWER=4500.0 MV**	Photometer lamp drive output.
SAMPPRESS	**PRES=29.9 IN-HG-A**	Sample pressure.
SAMPFLOW	**SAMP FL=700 CC/M**	Sample flow rate.
SAMPTEMP	**SAMPLE TEMP=31.2 C**	Sample temperature.
PHOTOLTEMP	**PHOTO LAMP=52.3 C**	Photometer lamp temperature.
PHOTOLDUTY [2]	**PHLMP ON=1.10 SEC**	Photometer lamp temperature control duty cycle. Portion of *PHOTO_CYCLE* time that heater is turned on.
O3SCRUBTEMP	**O3 SCRUB=110.2 C**	O_3 scrubber temperature.
O3SCRUBDUTY [2]	**O3 SCRUB ON=2.25 SEC**	O_3 scrubber temperature control duty cycle. Portion of *O3_SCRUB_CYCLE* time that heater is turned on.
O3GENTEMP	**O3 GEN TMP=48.5 C**	O_3 generator lamp temperature.
BOXTEMP	**BOX TEMP=31.2 C**	Internal chassis temperature.
SLOPE	**SLOPE=1.000**	Slope for current range, computed during zero/span calibration.
OFFSET	**OFFSET=0.0 PPB [2]**	Offset for current range, computed during zero/span calibration.
O3	**O3=191.6 PPB [2]**	O_3 concentration for current range.
TESTCHAN	**TEST=2753.9 MV**	Value output to *TEST_OUTPUT* analog output, selected with *TEST_CHAN_ID* variable.
XIN1 [4]	**AIN1=37.15 EU**	External analog input 1 value in engineering units.
XIN2 [4]	**AIN2=37.15 EU**	External analog input 2 value in engineering units.
XIN3 [4]	**AIN3=37.15 EU**	External analog input 3 value in engineering units.
XIN4 [4]	**AIN4=37.15 EU**	External analog input 4 value in engineering units.
XIN5 [4]	**AIN5=37.15 EU**	External analog input 5 value in engineering units.
XIN6 [4]	**AIN6=37.15 EU**	External analog input 6 value in engineering units.
XIN7 [4]	**AIN7=37.15 EU**	External analog input 7 value in engineering units.
XIN8 [4]	**AIN8=37.15 EU**	External analog input 8 value in engineering units.
CLOCKTIME	**TIME=14:48:01**	Current instrument time of day clock.

[1] The name is used to request a message via the RS-232 interface, as in “T BOXTEMP”.

[2] Engineering software.

[3] Current instrument units.

[4] External analog input option.

APPENDIX A-4: Signal I/O Definitions, Rev 1.0.0/E.3

Table A-4: T400 and M400E Signal I/O Definitions

SIGNAL NAME	BIT OR CHANNEL NUMBER	DESCRIPTION
Internal inputs, U7, J108, pins 9–16 = bits 0–7, default I/O address 322 hex		
	0–7	Spare
Internal outputs, U8, J108, pins 1–8 = bits 0–7, default I/O address 322 hex		
	0–5	Spare
I2C_RESET	6	1 = reset I2C peripherals 0 = normal
I2C_DRV_RST	7	0 = hardware reset 8584 chip 1 = normal
Control inputs, U11, J1004, pins 1–6 = bits 0–5, default I/O address 321 hex		
EXT_ZERO_CAL	0	0 = go into zero calibration 1 = exit zero calibration
EXT_LOW_SPAN_CAL [1]	1	0 = go into low span calibration 1 = exit span calibration
EXT_SPAN_CAL [1]	2	0 = go into span calibration 1 = exit span calibration
	3–5	Spare
	6–7	Always 1
Control inputs, U14, J1006, pins 1–6 = bits 0–5, default I/O address 325 hex		
	0–5	Spare
	6–7	Always 1
Control outputs, U17, J1008, pins 1–8 = bits 0–7, default I/O address 321 hex		
	0–7	Spare
Control outputs, U21, J1008, pins 9–12 = bits 0–3, default I/O address 325 hex		
	0–3	Spare
Alarm outputs, U21, J1009, pins 1–12 = bits 4–7, default I/O address 325 hex		
ST_SYSTEM_OK2, **MB_RELAY_36** [3]	4	1 = system OK 0 = any alarm condition or in diagnostics mode
		Controlled by MODBUS coil register
ST_CONC_ALARM_1 [4]**,** **MB_RELAY_37** [3]	5	1 = conc. limit 1 exceeded 0 = conc. OK
		Controlled by MODBUS coil register
ST_CONC_ALARM_2 [4]**,** **MB_RELAY_38** [3]	6	1 = conc. limit 2 exceeded 0 = conc. OK
		Controlled by MODBUS coil register
ST_HIGH_RANGE2 [5]**,** **MB_RELAY_39** [3]	7	1 = high auto-range in use (mirrors *ST_HIGH_RANGE* status output) 0 = low auto-range
		Controlled by MODBUS coil register
A status outputs, U24, J1017, pins 1–8 = bits 0–7, default I/O address 323 hex		
ST_SYSTEM_OK	0	0 = system OK 1 = any alarm condition
ST_CONC_VALID	1	0 = conc. valid 1 = hold off or other conditions
ST_HIGH_RANGE	2	0 = high auto-range in use 1 = low auto-range

SIGNAL NAME	BIT OR CHANNEL NUMBER	DESCRIPTION
ST_ZERO_CAL	3	0 = in zero calibration 1 = not in zero
ST_SPAN_CAL	4	0 = in span calibration 1 = not in span
ST_TEMP_ALARM	5	0 = any temperature alarm 1 = all temperatures OK
ST_FLOW_ALARM	6	0 = any flow alarm 1 = all flows OK
ST_PRESS_ALARM	7	0 = any pressure alarm 1 = all pressures OK
A status outputs, alternate status outputs factory option		
ST_DIAG_MODE	5	0 = in diagnostic mode 1 = not in diagnostic mode
ST_LOW_SPAN_CAL	6	0 = in low span calibration 1 = not in low span
	7	Spare
B status outputs, U27, J1018, pins 1–8 = bits 0–7, default I/O address 324 hex		
ST_DIAG_MODE	0	0 = in diagnostic mode 1 = not in diagnostic mode
ST_LOW_SPAN_CAL	1	0 = in low span calibration 1 = not in low span
ST_LAMP_ALARM	2	0 = any lamp alarm 1 = all lamps OK
	3–7	Spare
B status outputs, alternate status outputs factory option		
ST_TEMP_ALARM	0	0 = any temperature alarm 1 = all temperatures OK
ST_FLOW_ALARM	1	0 = any flow alarm 1 = all flows OK
ST_LAMP_ALARM	2	0 = any lamp alarm 1 = all lamps OK
ST_PRESS_ALARM	3	0 = any pressure alarm 1 = all pressures OK
	4–7	Spare
Front panel I^2C keyboard, default I^2C address 4E hex		
MAINT_MODE	5 (input)	0 = maintenance mode 1 = normal mode
LANG2_SELECT	6 (input)	0 = select second language 1 = select first language (English)
SAMPLE_LED	8 (output)	0 = sample LED on 1 = off
CAL_LED	9 (output)	0 = cal. LED on 1 = off
FAULT_LED	10 (output)	0 = fault LED on 1 = off
AUDIBLE_BEEPER	14 (output)	0 = beeper on (for diagnostic testing only) 1 = off

SIGNAL NAME	BIT OR CHANNEL NUMBER	DESCRIPTION
Relay board digital output (PCF8575), default I^2C address 44 hex		
RELAY_WATCHDOG	0	Alternate between 0 and 1 at least every 5 seconds to keep relay board active
O3_SCRUB_HEATER	1	0 = O_3 scrubber heater on 1 = off
	2–5	Spare
SPAN_VALVE	6	0 = let span gas in 1 = let zero gas in
PHOTO_REF_VALVE	7	0 = photometer valve in reference position 1 = measure position
CAL_VALVE	8	0 = let cal. gas in 1 = let sample gas in
	9–13	Spare
PHOTO_LAMP_HEATER	14	0 = O_3 photometer lamp heater on 1 = off
O3_GEN_HEATER	15	0 = O_3 generator lamp heater on 1 = off
Rear board primary MUX analog inputs		
PHOTO_DET	0	Photometer detector reading
O3_GEN_REF_DET	1	O_3 generator reference detector reading
	2	Spare
SAMPLE_PRESSURE	3	Sample pressure
	4	Temperature MUX
	5	Spare
SAMPLE_FLOW	6	Sample flow
TEST_INPUT_7	7	Diagnostic test input
TEST_INPUT_8	8	Diagnostic test input
REF_4096_MV	9	4.096V reference from MAX6241
	10–11	Spare
O3_SCRUB_TEMP	12	O_3 scrubber temperature
	13	Spare
	14	DAC loopback MUX
REF_GND	15	Ground reference
Rear board temperature MUX analog inputs		
BOX_TEMP	0	Internal box temperature
SAMPLE_TEMP	1	Sample temperature
PHOTO_LAMP_TEMP	2	Photometer lamp temperature
O3_GEN_TEMP	3	O_3 generator lamp temperature
	4–5	Spare
TEMP_INPUT_6	6	Diagnostic temperature input
TEMP_INPUT_7	7	Diagnostic temperature input
Rear board DAC MUX analog inputs		
DAC_CHAN_1	0	DAC channel 0 loopback
DAC_CHAN_2	1	DAC channel 1 loopback
DAC_CHAN_3	2	DAC channel 2 loopback
DAC_CHAN_4	3	DAC channel 3 loopback

SIGNAL NAME	BIT OR CHANNEL NUMBER	DESCRIPTION
Rear board analog outputs		
CONC_OUT_1	0	Concentration output #1
DATA_OUT_1 [6]		Data output #1
CONC_OUT_2	1	Concentration output #2
DATA_OUT_2 [6]		Data output #2
CONC_OUT_3 [2]	2	Concentration output #3 (non-step suppression channel, same range as output #1)
DATA_OUT_3 [6]		Data output #3
TEST_OUTPUT	3	Test measurement output
DATA_OUT_4 [6]		Data output #4
External analog input board, default I²C address 5C hex		
XIN1 [7]	0	External analog input 1
XIN2 [7]	1	External analog input 2
XIN3 [7]	2	External analog input 3
XIN4 [7]	3	External analog input 4
XIN5 [7]	4	External analog input 5
XIN6 [7]	5	External analog input 6
XIN7 [7]	6	External analog input 7
XIN8 [7]	7	External analog input 8
I²C analog output (AD5321), default I²C address 18 hex		
PHOTO_LAMP_DRIVE	0	O_3 photometer lamp drive (0–5V)
I²C analog output (AD5321), default I²C address 1A hex		
O3_GEN_DRIVE	0	O_3 generator lamp drive (0–5V)

[1] IZS option.
[2] Dual concentration calculation option.
[3] MODBUS option.
[4] Concentration alarm option.
[5] High auto range relay option.
[6] User-configurable D/A output option.
[5] External analog input option.

APPENDIX A-5: DAS Functions, Rev 1.0.0/E.3

Table A-5: T400 and M400E DAS Trigger Events

NAME	DESCRIPTION
ATIMER	Automatic timer expired
EXITZR	Exit zero calibration mode
EXITLS	Exit low span calibration mode
EXITHS	Exit high span calibration mode
EXITMP	Exit multi-point calibration mode
SLPCHG	Slope and offset recalculated
EXITDG	Exit diagnostic mode
CONC1W [1]	Concentration limit 1 exceeded
CONC2W [1]	Concentration limit 2 exceeded
PHREFW	Photometer reference warning
PHSTBW	Photometer lamp stability warning
PHTMPW	Photometer lamp temperature warning
O3REFW	Ozone generator reference warning
O3LMPW	Ozone generator lamp intensity warning
O3TMPW	Ozone generator lamp temperature warning
O3SBTW	Ozone scrubber temperature warning
STEMPW	Sample temperature warning
SFLOWW	Sample flow warning
SPRESW	Sample pressure warning
BTEMPW	Box temperature warning

[1] Concentration alarm option.

Table A-6: T400 and M400E DAS Functions

NAME	DESCRIPTION	UNITS
PHMEAS	Photometer detector measure reading	mV
PHREF	Photometer detector reference reading	mV
PHSTB	Photometer lamp stability	%
SLOPE1	Slope for range #1	—
SLOPE2	Slope for range #2	—
OFSET1	Offset for range #1	PPB
OFSET2	Offset for range #2	PPB
ZSCNC1	Concentration for range #1 during zero/span calibration, just before computing new slope and offset	PPB
ZSCNC2	Concentration for range #2 during zero/span calibration, just before computing new slope and offset	PPB
CONC1	Concentration for range #1	PPB
CONC2	Concentration for range #2	PPB
STABIL	Concentration stability	PPB
O3REF	Ozone generator reference detector reading	mV
O3DRIV	Ozone generator lamp drive	mV
O3TEMP	Ozone generator lamp temperature	Degrees C
O3STMP	Ozone scrubber temperature	Degrees C
O3SDTY	Ozone scrubber temperature duty cycle	Fraction (1.0 = 100%)
PHTEMP	Photometer lamp temperature	Degrees C
PHLDTY	Photometer lamp temperature duty cycle	Fraction (1.0 = 100%)
SMPTMP	Sample temperature	Degrees C
SMPFLW	Sample flow rate	cc/m
SMPPRS	Sample pressure	Inches Hg
BOXTMP	Internal box temperature	Degrees C
TEST7	Diagnostic test input (TEST_INPUT_7)	mV
TEST8	Diagnostic test input (TEST_INPUT_8)	mV
TEMP6	Diagnostic temperature input (TEMP_INPUT_6)	Degrees C
TEMP7	Diagnostic temperature input (TEMP_INPUT_7)	Degrees C
REFGND	Ground reference	mV
RF4096	Precision 4.096 mV reference	mV
XIN1 [1]	Channel 1 Analog In	
XIN1SLPE [1]	Channel 1 Analog In Slope	
XIN1OFST [1]	Channel 1 Analog In Offset	
XIN2 [1]	Channel 2 Analog In	
XIN2SLPE [1]	Channel 2 Analog In Slope	
XIN2OFST [1]	Channel 2 Analog In Offset	
XIN3 [1]	Channel 3 Analog In	
XIN3SLPE [1]	Channel 3 Analog In Slope	
XIN3OFST [1]	Channel 3 Analog In Offset	

NAME	DESCRIPTION	UNITS
XIN4 [1]	Channel 4 Analog In	
XIN4SLPE [1]	Channel 4 Analog In Slope	
XIN4OFST [1]	Channel 4 Analog In Offset	
XIN5 [1]	Channel 5 Analog In	
XIN5SLPE [1]	Channel 5 Analog In Slope	
XIN5OFST [1]	Channel 5 Analog In Offset	
XIN6 [1]	Channel 6 Analog In	
XIN6SLPE [1]	Channel 6 Analog In Slope	
XIN6OFST [1]	Channel 6 Analog In Offset	
XIN7 [1]	Channel 7 Analog In	
XIN7SLPE [1]	Channel 7 Analog In Slope	
XIN7OFST [1]	Channel 7 Analog In Offset	
XIN8 [1]	Channel 8 Analog In	
XIN8SLPE [1]	Channel 8 Analog In Slope	
XIN8OFST [1]	Channel 8 Analog In Offset	
[1] External Analog In option, T-Series only.		

APPENDIX A-6: Terminal Command Designators

Table A-7: Terminal Command Designators

COMMAND	ADDITIONAL COMMAND SYNTAX	DESCRIPTION
? [ID]		Display help screen and commands list
LOGON [ID]	password	Establish connection to instrument
LOGOFF [ID]		Terminate connection to instrument
T [ID]	SET ALL|name|hexmask	Display test(s)
	LIST [ALL|name|hexmask] [NAMES|HEX]	Print test(s) to screen
	name	Print single test
	CLEAR ALL|name|hexmask	Disable test(s)
W [ID]	SET ALL|name|hexmask	Display warning(s)
	LIST [ALL|name|hexmask] [NAMES|HEX]	Print warning(s)
	name	Clear single warning
	CLEAR ALL|name|hexmask	Clear warning(s)
C [ID]	ZERO|LOWSPAN|SPAN [1|2]	Enter calibration mode
	ASEQ number	Execute automatic sequence
	COMPUTE ZERO|SPAN	Compute new slope/offset
	EXIT	Exit calibration mode
	ABORT	Abort calibration sequence
D [ID]	LIST	Print all I/O signals
	name[=value]	Examine or set I/O signal
	LIST NAMES	Print names of all diagnostic tests
	ENTER name	Execute diagnostic test
	EXIT	Exit diagnostic test
	RESET [DATA] [CONFIG] [exitcode]	Reset instrument
	PRINT ["name"] [SCRIPT]	Print DAS configuration
	RECORDS ["name"]	Print number of DAS records
	REPORT ["name"] [RECORDS=number] [FROM=<start date>][TO=<end date>][VERBOSE|COMPACT|HEX] (Print DAS records)(date format: MM/DD/YYYY(or YY) [HH:MM:SS]	Print DAS records
	CANCEL	Halt printing DAS records
V [ID]	LIST	Print setup variables
	name[=value [warn_low [warn_high]]]	Modify variable
	name="value"	Modify enumerated variable
	CONFIG	Print instrument configuration
	MAINT ON|OFF	Enter/exit maintenance mode
	MODE	Print current instrument mode
	DASBEGIN [<data channel definitions>] DASEND	Upload DAS configuration
	CHANNELBEGIN propertylist CHANNELEND	Upload single DAS channel
	CHANNELDELETE ["name"]	Delete DAS channels

The command syntax follows the command type, separated by a space character. Strings in [brackets] are optional designators. The following key assignments also apply.

Table A-8: Terminal Key Assignments

TERMINAL KEY ASSIGNMENTS	
ESC	Abort line
CR (ENTER)	Execute command
Ctrl-C	Switch to computer mode
COMPUTER MODE KEY ASSIGNMENTS	
LF (line feed)	Execute command
Ctrl-T	Switch to terminal mode

APPENDIX A-7: MODBUS Register Map

MODBUS Register Address (dec., 0-based)	Description	Units
MODBUS Floating Point Input Registers (32-bit IEEE 754 format; read in high-word, low-word order; read-only)		
0	Photometer detector measure reading	mV
2	Photometer detector reference reading	mV
4	Photometer lamp stability	%
6	Slope for range #1	—
8	Slope for range #2	—
10	Offset for range #1	PPB
12	Offset for range #2	PPB
14	Concentration for range #1 during zero/span calibration, just before computing new slope and offset	PPB
16	Concentration for range #2 during zero/span calibration, just before computing new slope and offset	PPB
18	Concentration for range #1	PPB
20	Concentration for range #2	PPB
22	Concentration stability	PPB
24	Ozone generator reference detector reading	mV
26	Ozone generator lamp drive	mV
28	Ozone generator lamp temperature	°C
30	Ozone scrubber temperature	°C
32	Ozone scrubber temperature duty cycle	Fraction (1.0 = 100%)
34	Photometer lamp temperature	°C
36	Photometer lamp temperature duty cycle	Fraction (1.0 = 100%)
38	Sample temperature	°C
40	Sample flow rate	cc/m
42	Sample pressure	Inches Hg
44	Internal box temperature	°C
46	Diagnostic test input (TEST_INPUT_7)	mV
48	Diagnostic test input (TEST_INPUT_8)	mV
50	Diagnostic temperature input (TEMP_INPUT_6)	°C
52	Diagnostic temperature input (TEMP_INPUT_7)	°C
54	Ground reference	mV
56	Precision 4.096 mV reference	mV
130 [4]	External analog input 1 value	Volts
132 [4]	External analog input 1 slope	eng unit /V
134 [4]	External analog input 1 offset	eng unit
136 [4]	External analog input 2 value	Volts

MODBUS Register Address (dec., 0-based)	Description	Units
138 [4]	External analog input 2 slope	eng unit /V
140 [4]	External analog input 2 offset	eng unit
142 [4]	External analog input 3 value	Volts
144 [4]	External analog input 3 slope	eng unit /V
146 [4]	External analog input 3 offset	eng unit
148 [4]	External analog input 4 value	Volts
150 [4]	External analog input 4 slope	eng unit /V
152 [4]	External analog input 4 offset	eng unit
154 [4]	External analog input 5 value	Volts
156 [4]	External analog input 5 slope	eng unit /V
158 [4]	External analog input 5 offset	eng unit
160 [4]	External analog input 6 value	Volts
162 [4]	External analog input 6 slope	eng unit /V
164 [4]	External analog input 6 offset	eng unit
166 [4]	External analog input 7 value	Volts
168 [4]	External analog input 7 slope	eng unit /V
170 [4]	External analog input 7 offset	eng unit
172 [4]	External analog input 8 value	Volts
174 [4]	External analog input 8 slope	eng unit /V
176 [4]	External analog input 8 offset	eng unit
MODBUS Floating Point Holding Registers (32-bit IEEE 754 format; read/write in high-word, low-word order; read/write)		
0	Maps to *O3_TARG_ZERO1* variable; target zero concentration for range #1	Conc. units
2	Maps to *O3_SPAN1* variable; target span concentration for range #1	Conc. units
4	Maps to *O3_TARG_ZERO2* variable; target zero concentration for range #2	Conc. units
6	Maps to *O3_SPAN2* variable; target span concentration for range #2	Conc. units
MODBUS Discrete Input Registers (single-bit; read-only)		
0	O_3 generator reference detector warning	
1	O_3 generator lamp intensity warning	
2	O_3 generator lamp temperature warning	
3	O_3 scrubber temperature warning	
4	Photometer reference warning	
5	Photometer lamp stability warning	
6	Photometer lamp temperature warning	
7	Box temperature warning	
8	Sample temperature warning	
9	Sample flow warning	

MODBUS Register Address (dec., 0-based)	Description	Units
10	Sample pressure warning	
11	System reset warning	
12	Rear board communication warning	
13	Relay board communication warning	
14	O_3 generator or photometer lamp I^2C driver chip communication warning	
15	Front panel communication warning	
16	Analog calibration warning	
17	Dynamic zero warning	
18	Dynamic span warning	
19	Invalid concentration	
20	In zero calibration mode	
21	In low span calibration mode	
22	In span calibration mode	
23	In multi-point calibration mode	
24	System is OK (same meaning as *SYSTEM_OK* I/O signal)	
25 [3]	O_3 concentration alarm limit #1 exceeded	
26 [3]	O_3 concentration alarm limit #2 exceeded	
MODBUS Coil Registers (single-bit; read/write)		
0	Maps to relay output signal 36 (*MB_RELAY_36* in signal I/O list)	
1	Maps to relay output signal 37 (*MB_RELAY_37* in signal I/O list)	
2	Maps to relay output signal 38 (*MB_RELAY_38* in signal I/O list)	
3	Maps to relay output signal 39 (*MB_RELAY_39* in signal I/O list)	
20 [1]	Triggers zero calibration of O_3 range #1 (on enters cal.; off exits cal.)	
21 [2]	Triggers low span calibration of O_3 range #1 (on enters cal.; off exits cal.)	
22 [1]	Triggers span calibration of O_3 range #1 (on enters cal.; off exits cal.)	
23 [1]	Triggers zero calibration of O_3 range #2 (on enters cal.; off exits cal.)	
24 [2]	Triggers low span calibration of O_3 range #2 (on enters cal.; off exits cal.)	
25 [1]	Triggers span calibration of O_3 range #2 (on enters cal.; off exits cal.)	

[1] Set *DYN_ZERO* or *DYN_SPAN* variables to *ON* to enable calculating new slope or offset. Otherwise a calibration check is performed.

[2] O_3 generator or zero/span valve factory options must be enabled.

[3] Concentration alarm option.

[4] External analog input option.

This page intentionally left blank.

Appendix B - Wiring Diagram

REVISIONS				
REV	DESCRIPTION	DATE	DCN	APPROVED
A	INITIAL RELEASE	9/3/10	5833	KV

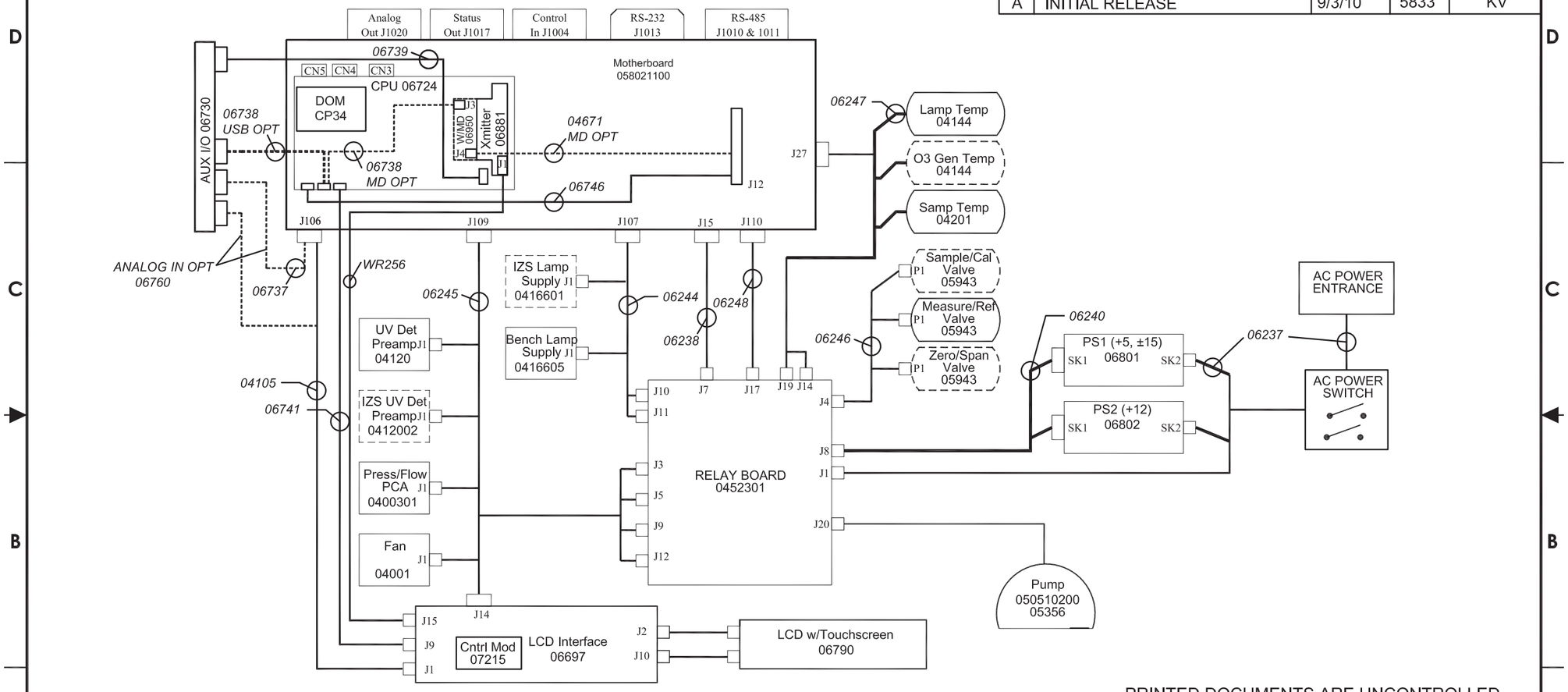

PRINTED DOCUMENTS ARE UNCONTROLLED

KEY:
1. All part numbers in *Italic* identify cables that are refered to in the accompanying document 069130100.
2. All items in Dashed boxes are optional.

The information hereon is the property of API and is submitted in strictest confidence for reference only. Unauthorized use by anyone for any other purposes is prohited. this document or an information contained in it may not be duplicated without proper authorization.

THIRD ANGLE PROJECTION

UNLESS OTHERWISE SPECIFIED DIMENSIONS ARE IN INCHES
TOLERANCES ARE:
FRACTIONS ± 1/32 DECIMALS ±.03[0.76] ±.010[0.25] ANGULAR ±0° 30'
DO NOT SCALE DRAWING
TREATMENT: NA
FINISH:
SIMILAR TO:

CONTRACT: NA

APPROVALS	DATE
DRAWN KV	5/10
CHECK	
CCB	
ISSUED	

TELEDYNE
Advanced Pollution Instrumentation
A Teledyne Technologies Company

TITLE: INTERCONNECT DRAWING T400

SIZE	CAGE CODE NO.	DWG. NO.	REV
B	1JZF4	06913	A

SCALE 1/1 FILE 06913 SHEET 1 OF 1